Federal Register

Thursday,
November 3, 2005

Part III

Department of Homeland Security

Coast Guard

33 CFR Parts 155 and 157

46 CFR Part 162

Pollution Prevention Equipment; Proposed Rule

DEPARTMENT OF HOMELAND SECURITY

Coast Guard

33 CFR Parts 155 and 157

46 CFR Part 162

[USCG–2004–18939]

RIN 1625–AA90

Pollution Prevention Equipment

AGENCY: Coast Guard, DHS.

ACTION: Notice of proposed rulemaking.

SUMMARY: The Coast Guard proposes to revise its pollution prevention equipment regulations to make them consistent with new International Maritime Organization (IMO) guidelines and specifications issued under the International Convention for the Prevention of Pollution from Ships (MARPOL) Annex I. These revisions should effectively implement MARPOL Annex I regulations, reduce the amount of oil discharged from vessels, and eliminate the use of ozone-depleting solvents in equipment tests. The proposed rule would require newly constructed vessels carrying oil in bulk to install cargo monitors that meet revised standards and require all vessels replacing or installing oil separators and bilge alarms to install equipment that meets revised standards. Tests for approval of this equipment would also be revised both to deal with common bilge contaminants and to eliminate the use of ozone-depleting solvents.

DATES: Comments and related material must reach the Docket Management Facility on or before February 1, 2006.

ADDRESSES: You may submit comments identified by Coast Guard docket number USCG–2004–18939 to the Docket Management Facility at the U.S. Department of Transportation. To avoid duplication, please use only one of the following methods:

(1) Web Site: *http://dms.dot.gov.*

(2) Mail: Docket Management Facility, U.S. Department of Transportation, 400 Seventh Street, SW., Washington, DC 20590–0001.

(3) Fax: 202–493–2251.

(4) Delivery: Room PL–401 on the Plaza level of the Nassif Building, 400 Seventh Street, SW., Washington, DC, between 9 a.m. and 5 p.m., Monday through Friday, except Federal holidays. The telephone number is 202–366–9329.

(5) Federal eRulemaking Portal: *http://www.regulations.gov.*

You may inspect the material proposed for incorporation by reference at room 1300, U.S. Coast Guard Headquarters, 2100 Second Street, SW., Washington, DC 20593–0001 between 9 a.m. and 4 p.m., Monday through Friday, except Federal holidays. The telephone number is 202–267–6640. Copies of the material are available as indicated in the ''Incorporation by Reference'' section of this preamble.

FOR FURTHER INFORMATION CONTACT: If you have questions on this proposed rule, call Lieutenant Commander George Grills, Systems Engineering Division (G–MSE–3), Office of Design and Engineering Standards, U.S. Coast Guard, telephone 202–267–6640. If you have questions on viewing or submitting material to the docket, call Renee V. Wright, Program Manager, Docket Operations, telephone 202–493–0402.

SUPPLEMENTARY INFORMATION:

Preamble Organization

This preamble is organized as follows:

Public Participation and Request for Comments
Submitting comments
Viewing comments and documents
Privacy Act
Public Meeting
Background and Purpose
Which vessels would this proposed rule affect?
Regulatory History
Discussion of Proposed Rule
Incorporation by Reference
Regulatory Evaluation
Background
Proposed Action
Applicability
Costs
Benefits
Smal Entities
Assistance for Small Entities
Collection of Information
Federalism
Undated Mandates Reform Act
Taking of Private Property
Civil Justice Reform
Protection of Children
Indian Tribal Governments
Energy Effects
Technical Standards
Environment

Public Participation and Request for Comments

We encourage you to participate in this rulemaking by submitting comments and related materials. All comments received will be posted, without change, to *http://dms.dot.gov* and will include any personal information you have provided. We have an agreement with the Department of Transportation (DOT) to use the Docket Management Facility. Please see DOT's ''Privacy Act'' paragraph below.

Submitting comments: If you submit a comment, please include your name and address, identify the docket number for this rulemaking (USCG–2004–18939), indicate the specific section of this document to which each comment applies, and give the reason for each comment. You may submit your comments and material by electronic means, mail, fax, or delivery to the Docket Management Facility at the address under **ADDRESSES**; but please submit your comments and material by only one means. If you submit them by mail or delivery, submit them in an unbound format, no larger than 8½ by 11 inches, suitable for copying and electronic filing. If you submit them by mail and would like to know that they reached the Facility, please enclose a stamped, self-addressed postcard or envelope. We will consider all comments and material received during the comment period. We may change this proposed rule in view of them.

Viewing comments and documents: To view comments, as well as documents mentioned in this preamble as being available in the docket, go to *http://dms.dot.gov* at any time and conduct a simple search using the docket number. You may also visit the Docket Management Facility in room PL–401 on the Plaza level of the Nassif Building, 400 Seventh Street, SW., Washington, DC, between 9 a.m. and 5 p.m., Monday through Friday, except Federal holidays.

Privacy Act: Anyone can search the electronic form of all comments received into any of our dockets by the name of the individual submitting the comment (or signing the comment, if submitted on behalf of an association, business, labor union, etc.). You may review the Department of Transportation's Privacy Act Statement in the **Federal Register** published on April 11, 2000 (65 FR 19477), or you may visit *http://dms.dot.gov.*

Public Meeting

We do not now plan to hold a public meeting. But you may submit a request for one to the Docket Management Facility at the address under **ADDRESSES** explaining why one would be beneficial. If we determine that one would aid this rulemaking, we will hold one at a time and place announced by a later notice in the **Federal Register**.

Background and Purpose

Under the Act to Prevent Pollution from Ships, Pub. L. 96–478, sections 2 and 4, 94 Stat. 2297, 2298 (Oct. 21, 1980), 33 U.S.C. 1901 and 1903, the Secretary of the Department in which the Coast Guard is operating is authorized to prescribe any necessary or desired regulations to carry out the provisions of the Act and of Annexes I and II of the International Convention

for the Prevention of Pollution from Ships, 1973, as modified by the Protocol of 1978 relating to that Convention (MARPOL 73/78). Under the Act of August 26, 1983, Pub. L. 98–89, 97 Stat. 500, 504, 522, subtitle II of title 46 of the U.S. Code, specifically 46 U.S.C. 3703, the Secretary in which the Coast Guard is operating is authorized to issue equipment regulations for vessels carrying liquid bulk dangerous cargo, including oil. Authority under both of these acts has been delegated to the Coast Guard under Department of Homeland Security Delegation No. 0170.1 (2)(77) and (92)(b).

For some time, it has been well understood by the international maritime community that existing pollution prevention equipment (PPE) is not adequately designed to process bilge wastes. Pollution prevention equipment on vessels encounter bilge wastes that are not replicated in test fluids used for certifying and approving PPE. This has led to release of more oil into the marine environment than desired. Of specific concern has been emulsified oil in water, surfactants (for example, detergents), and other contaminants typically found in bilge water.

A second problem concerned the method by which oil content is measured in effluent samples during the approval process. Existing methods require the use of ozone-depleting solvents, specifically carbon tetrachloride and Freon 113 (CFC 113). Both an international treaty and laws of the United States call for phasing out the use of these solvents. Therefore, an alternative test method was desired.

Having identified these concerns, the International Maritime Organization's (IMO) Marine Environment Protection Committee (MEPC) instructed the Ship Design and Equipment subcommittee to develop new performance standards to replace those referenced in MARPOL Annex I. The Ship Design and Equipment subcommittee drafted new resolutions, in which the U.S. participated, that were ultimately approved by the MEPC at its 49th session in July 2003 and designated as MEPC.107(49) and MEPC.108(49).

Which Vessels Would This Proposed Rule Affect?

Our proposed rule would not change the type or class of vessels that require a cargo monitor, oily-water separator (OWS), or bilge alarm under 33 CFR part 155, subpart B, or 33 CFR part 157; it would only require that such equipment meet new pollution prevention standards.

Regulatory History

Even before Annex I of MARPOL 73/78 came into force internationally in 1983, the Coast Guard issued a final rule (44 FR 53352, September 13, 1979) containing PPE design and approval requirements. On December 31, 2003, the Coast Guard published in the **Federal Register** (68 FR 75603) a notice of policy informing the public of the new MEPC resolutions, our desire to update 46 CFR subpart 162.050, and our willingness to consider alternatives to the performance and testing standards in part 162.050.

Discussion of Proposed Rule

The proposed rule would revise 46 CFR subpart 162.050 to reflect the new IMO PPE guidelines and specifications that governments have been invited to apply on or after January 1, 2005, to their implementation of MARPOL Annex I regulations. The proposed rule would also align 46 CFR subpart 162.050 more closely with the IMO PPE guidelines by removing the bilge monitor standard. The six factors that were considered in the decision to propose to remove the bilge monitor follow:

1. A bilge monitor includes a 100 parts per million (ppm) performance standard that is no longer an allowed discharge concentration of oil at sea nationally or internationally.

2. There is no longer an equivalent to a bilge monitor requirement in the IMO guidelines or MARPOL Annex I. The IMO resolutions and Annex I call for three types of PPE equipment: cargo monitors, oil separators and bilge alarms. In addition to these three types of equipment, the equipment that can obtain approval under subpart 162.050 currently also includes bilge monitors. Retaining the bilge monitor design and approval standards in the proposed subpart 162.050 results in unique testing and performance requirements inconsistent with international standards.

3. According to our records, the Coast Guard has not received an approval application for a bilge monitor in more than a decade.

4. Only four bilge monitors are listed in the Coast Guard equipment database and only one of those has maintained an ''approved'' status. All the others are ''former-may use'' or ''expired.''

5. There are no specific requirements in the current regulations for installing a bilge monitor—it is an alternative to installation of a bilge alarm.

6. The new bilge alarm requirements incorporate a recording function which, other than the 100-ppm alarm, was the major difference between the bilge alarm and bilge monitor. As proposed, a bilge monitor requirement in the proposed subpart 162.050 would be both redundant and obsolete.

Unlike many of the engineering references incorporated into our current regulations, subpart 162.050 contains text taken in large part from the IMO documents detailing the performance and testing requirements. Two options exist for updating subpart 162.050:

1. Replace existing regulatory text with detailed text implementing the new IMO standards by describing them; or

2. Replace existing regulatory text with new text that relies heavily on incorporating the new standards by reference to resolutions MEPC.107(49) and MEPC.108(49), and ISO 9377–2.

In seeking to avoid conflicts between Coast Guard PPE regulations and MARPOL Annex I guidelines and specifications that Member States are invited to make applicable on or after January 1, 2005, we considered incorporating the MARPOL guidelines and specifications by reference—and not have any differences between the MARPOL guidelines and specifications and Coast Guard PPE standards—but we decided to maintain some differences.

Some of our regulations will be more specific and concrete than the MARPOL Annex I guidelines and specifications. We will, for example, specify when and where inclination tests will be performed. These differences are intended to make the regulations easier to enforce and more likely to ensure that the oil-release-reduction goals of the MARPOL Annex I guidelines and specifications are met.

Incorporation by Reference

New material proposed for incorporation by reference is added in both 33 CFR 157.02 and 46 CFR 162.050–4. You may inspect this material at U.S. Coast Guard Headquarters where indicated under **ADDRESSES.** Copies of the material are available from the sources listed in §§ 157.02 and 162.050–4.

Before publishing a binding rule, we will submit copies of all of the proposed new material to the Director of the Office of the Federal Register for approval of the incorporation by reference.

Regulatory Evaluation

This proposed rule is not a ''significant regulatory action'' under section 3(f) of Executive Order 12866, Regulatory Planning and Review, and does not require an assessment of potential costs and benefits under

section 6(a)(3) of that Order. The Office of Management and Budget has not reviewed it under that Order. A draft Regulatory Evaluation follows:

Background

This NPRM proposes to change the performance standards of oily-water separators (OWS), bilge alarms, and cargo monitors to meet the revised guidelines and specifications for the MARPOL Annex I standards.

In analyzing the cost impact of this proposed rule, we considered the increase in cost to buyers of new vessels who must install new pollution prevention equipment meeting the revised standards, and owners and operators of existing vessels who must replace old equipment with the new pollution prevention equipment.

Proposed Action

The Coast Guard proposes to make the following changes to pollution prevention equipment performance standards, outlined in 46 CFR part 162, subpart 162.050:

- Remove the requirement for a bilge monitor;
- Require OWSs to effectively process emulsified oils, surfactants, and contaminants;
- Change standards for the bilge alarm which must now: 1. Pass new tests using emulsified oil and contaminants; 2. have a ppm display; 3. display each change in oil content of the mixture it is measuring within 5 seconds after the change occurs instead of every 20 seconds; 4. limit access to the bilge alarm beyond checking instrument drift must be limited; repeatability of the instrument reading and the ability to re-zero the instrument must require the breaking of a seal; 5. activate its alarm whenever clean water is used for cleaning or zeroing purposes; and 6. record date, time, alarm status, and operating status of the 15 ppm bilge separator. The recording device must also store data for at least 18 months and be able to display or print a protocol. In the event the 15 ppm bilge alarm is replaced, means must be provided to ensure the data recorded remains available on board for 18 months; and,
- Change standards for cargo monitors that are used with category C and D oil-like noxious liquid substances. Based on our research, we found that the manufacturers of cargo monitors, plan to sell these monitors meeting the new standards for approximately the same retail price as the old equipment. Therefore, there is no additional cost to vessel owners for this requirement.

We expect there to be no additional cost to industry for removing the requirement for bilge monitors, or changing standards for cargo monitors because there will be no change in cost for installation, operation, and maintenance.

Applicability

This proposed rule applies to all ocean-going vessels that operate in U.S. waters. Foreign vessels in compliance with MARPOL need not prove compliance with the domestic equipment approval standards. Therefore, this rule primarily affects U.S. flag vessels.

The vessels impacted by the proposed changes for the bilge alarm and the OWS are described in 33 CFR 155.380, and are divided into three main categories:

- 33 CFR 155.350—Oceangoing vessels of less than 400 gross tons (GT). These vessels are not required to have the equipment on board if they have the capacity to retain on board all oily mixtures and can discharge these oily mixtures to a reception facility. Certain vessels, in this category that embark on international voyages, however, are required to have an International Pollution Prevention Certificate (IOPP) that requires them to have pollution prevention equipment on board. Based on Coast Guard data, we estimate that 30 percent of the fleet have the IOPP Certificate and have OWSs and bilge alarms on board.
- Oceangoing vessels of 400 GT and above, but less than 10,000 GT. The current regulations require all vessels in this category to have an installed OWS and if the vessel ballasts the fuel tanks and/or plans to discharge through the OWS within 12 nm of land the vessel must also have a bilge alarm. Additionally, vessels in this category that embark on international voyages, which are required to have an IOPP Certificate, have the pollution prevention equipment on board. Based on Coast Guard and industry information, we assume the majority of new construction oceangoing vessels have bilge alarms and the OWSs on board.
- 33 CFR 155.370—Oceangoing vessels of 10,000 GT and above. The current regulation requires all oceangoing vessels in this tonnage range to have both an OWS and bilge alarm. We assume all of these vessels comply with these regulations and have the equipment.

Costs

The following vessel population estimates are based on 2004 Coast Guard data. There are approximately 86 new oceangoing vessels built per year that would be affected by this proposed rule. Of these, approximately 29 new vessels are 400 GT or greater and must meet the new requirements to have bilge alarms and oily water separators that meet the new standards. Of the remaining 57 vessels less than 400 GT, we assume 30 percent, or approximately 17 vessels, will be installing the equipment because they will embarking on international voyages and are required to carry pollution prevention equipment.

All existing vessels subject to these PPE regulations, approximately 5,838 U.S. flag vessels, must install equipment that meets the new standards whenever the owners or operators replace the equipment. Based on Coast Guard data, we assume that the entire existing fleet of vessels 400 GT and over will update its equipment as it breaks down over the next 20 years, which is approximately the length of service for these U.S. flag vessels. We assume that the 30 percent of the fleet below 400 GT that has this equipment on board will also update it once over the service life of the vessel.

The cost of this proposed rule to vessel owners is the additional price owners must pay for the higher-priced pollution prevention equipment that meets the new MARPOL standards. The owners and operators of existing vessels would face no immediate mandatory implementation costs from this proposed rule, but they would face ongoing costs as they update equipment or install new equipment on new vessels.

We calculated the cost of the rulemaking for the next 10 years (2005–2014), which is a long enough period of analysis to capture the majority of the future costs of this rulemaking. This follows OMB's guidance that the ending point for calculating costs ''should be far enough in the future to encompass all significant benefits and costs likely to result from the rule'' (see OMB Circular A–4, page 31). However, in other cases, simply presenting annualized costs are sufficient. For example, OMB's Circular A–4 (page 36) notes that if the expected flow of costs is constant over time, then annualizing the cost stream is sufficient and further discounting is unnecessary. That said, for this rulemaking we would have been on safe ground simply reporting annualized costs.

For vessel owners and operators that would be replacing equipment once over the service life of the vessel or once every twenty years, we assume that five percent of the affected population would update their equipment for each year in the 10-year period of analysis.

We considered possible increases in the operation and maintenance (O&M) costs. Based on Coast Guard and industry information, we estimate that the O&M cost of the new equipment would not be more than the O&M costs of the existing equipment, and in some instances would cost less. Therefore, we assume that there would be no significant increases in O&M costs, since vessels routinely face similar costs for existing installed equipment.

For OWSs, there is a wide range in the price of the equipment depending on flow rates and levels of technological capability. Based on discussions with manufacturers, we find that there is currently considerable variability in market prices as suppliers begin to market and sell the new equipment. Still, we believe we have estimated average price increases that are reasonably accurate. We separated the vessel categories into the three groups discussed earlier, and assume an average price increase of:

- $8,000 for vessels below 400 GT;
- $12,000 for vessels 400 GT or more and less than 10,000 GT; and
- $18,000 for vessels 10,000 GT and over.

For bilge alarms, there is less of a variation in the price. The change in the price ranges from approximately $400 to $1,500 and we assume an average price increase of $1,000 for all vessel categories.

Thus, the total price increase for both oily water separators and bilge alarms combined is:

- $9,000 for vessels below 400 GT;
- $13,000 for vessels 400 GT or more and less than 10,000 GT; and
- $19,000 for vessels 10,000 GT and over.

We estimate the total annual cost for new vessels is $548,000 and the total annual cost for existing vessels is $2,298,000. See Tables 1 and 2 below for details on the calculations of the annual costs.

TABLE 1.—ANNUAL COST OF OILY-WATER SEPARATORS (OWS) & BILGE ALARMS FOR NEW VESSELS

Vessel types	Price increase	Annually affected New vessels	Annual cost
<400 GT	$9,000	17	$153,000
≥400 GT and <10,000 GT	13,000	26	338,000
≥10,000 GT	19,000	3	57,000
Total		46	548,000

TABLE 2.—ANNUAL COST OF OWSS & BILGE ALARMS FOR EXISTING VESSELS

Vessel types	Price increase	Annually affected existing vessels (w/ 20-yr break-down rate)	Annual cost
<400 GT	$9,000	50	$450,000
≥400 GT and <10,000 GT	13,000	91	1,183,000
≥10,000 GT	19,000	35	665,000
Total		176	2,298,000

We estimate the total annual cost of this rule to industry would be $2,846,000 ($548,000 + $2,298,000). The present value of the total cost for the next 10 years is $21,388,531, based on a 7 percent discount rate, and $25,005,266, based on a 3 percent discount rate.

To the extent that shippers purchase equipment from U.S. suppliers, this is a transfer from shippers to suppliers.

To the extent that shippers will pass on these costs to their customers, these consumers and their customers will bear most of the burden of the rule. Given that vessel owners will phase in the equipment over 20 years, vessel owners may be more likely to try to absorb as much of this increase as possible over the first few years.

To the extent that vessel owners do eventually pass on costs to consumers, these price increases would be small given vessel owners and operators can spread these costs over thousands of voyages.

Benefits

The benefits of this proposed rule are mainly in the improved environmental conditions resulting from the use of PPE which meets higher standards of pollution prevention. The new OWSs will better handle the separation of emulsified oils, surfactants and contaminants from water whereas in previously approved units this may not have occurred. There would also be a broader range and volume of pollutants no longer released into the environment because of these new standards, which is a positive impact of this proposed rule.

Testing standards for pollution prevention equipment outlined in 46 CFR 162.050–39 currently require the use of the solvents carbon tetrachloride and Freon 113 (CFC 113), which have been phased out by the Montreal Protocol on Substances that Deplete the Ozone Layer. This proposed rule would require a new test protocol to be used for testing the oil separating capabilities of pollution prevention equipment—outlined in 46 CFR 162.050–39—that does not include these substances.

Small Entities

Under the Regulatory Flexibility Act (5 U.S.C. 601–612), we have considered whether this proposed rule would have a significant economic impact on a substantial number of small entities. The term ''small entities'' comprises small businesses, not-for-profit organizations that are independently owned and operated and are not dominant in their fields, and governmental jurisdictions with populations of less than 50,000.

The small entities affected by the proposed rule are vessels owners required to install or replace pollution prevention equipment meeting the new standards on their vessels.

To analyze the financial impact of the proposed rule on small entities, we selected and analyzed a random sample of 360 vessels that is statistically representative of the target population

of 5,838. In the entire population, 2,780 companies own these 5,838 vessels. In the random sample, we found that 263 companies owned the 360 vessels. In this sample, 69 small companies owned 79 vessels, 47 large companies owned 99 vessels, the Federal government owned 26 vessels and we found 156 vessels with no revenue information available on their 146 owners.

We then assessed the impact of cost on the revenue of the companies with information that we identified as small entities, and broke them down by the percentage impact on revenue. The large majority of small entities (about 87 percent) face an impact on revenue between 0 and 4 percent. To be conservative, we assumed that all vessels with no available information on their ownership were owned by small entities. We further assumed that the percentage impact of annual cost on annual revenue was distributed in the same proportion as the small businesses for both the vessels with no information in the random sample, and for the entire target population. See Table 3 below for details.

TABLE 3.—IMPACT OF COST ON SMALL ENTITIES

Percent of annual revenue impact	Number of entities with known annual revenues	Percentage of entities with known annual revenues	Expanded number of entities with unknown annual revenues	Distribution of small entities in total population
0 – 1%	41	59	87	1,074
>1% – 4%	19	28	40	498
>4% – 10%	5	7	11	131
>10% – 20%	0	0	0	0
>20% – 30%	3	4	6	79
>30%	1	1	2	26
Total	69	100	146	1,807

* Some values may not total due to rounding.

Under the Clean Air Act, as amended, specifically under 42 U.S.C. 7671a, we must eliminate the use of ozone-depleting testing solvents in our current PPE regulations. Therefore, ''no action'' is not an option. Also, the United States is party to MARPOL Annex I. To effectively implement MARPOL Annex I regulations, we must revise our other PPE regulations to reflect that resolutions MEPC.107(49) and MEPC.108(49) have superseded resolutions MEPC.60(33) and A.586(14), respectively.

We believe the proposed regulations will have a minimal costs to small businesses. First, existing vessels are not required to immediately install pollution prevention equipment meeting the new standards, but only when they are replacing it, which could be over a long period of time. Second, 57 percent of vessel types in the small business category are below 400 GT, and owners of these vessels have the option of not installing pollution prevention equipment and instead discharging oily mixtures at a reception facility. Finally, the prices of OWS systems (the highest cost component of this proposed rule) vary widely depending on a range of factors including their technological capability, so that vessel owners can choose cheaper versions within the options available to them.

Therefore, the Coast Guard certifies under 5 U.S.C. 605(b) that this proposed rule would not have a significant economic impact on a substantial number of small entities. If you think that your business, organization, or governmental jurisdiction qualifies as a small entity and that this rule would have a significant economic impact on it, please submit a comment to the Docket Management Facility at the address under **ADDRESSES.** In your comment, explain why you think it qualifies and how and to what degree this rule would economically affect it.

Assistance for Small Entities

Under section 213(a) of the Small Business Regulatory Enforcement Fairness Act of 1996 (Pub. L. 104–121), we want to assist small entities in understanding this proposed rule so that they can better evaluate its effects on them and participate in the rulemaking. If the rule would affect your small business, organization, or governmental jurisdiction and you have questions concerning its provisions or options for compliance, please consult Lt. George Grills, Office of Systems Engineering (G–MSE–3), Coast Guard, telephone 202–267–6640. The Coast Guard will not retaliate against small entities that question or complain about this rule or any policy or action of the Coast Guard.

Collection of Information

This proposed rule would call for no new collection of information under the Paperwork Reduction Act of 1995 (44 U.S.C. 3501–3520).

The paperwork burden associated with the manufacture, laboratory testing, approval tests, and marking of pollution prevention equipment is addressed in the existing collection of information, OMB #1625–0035, entitled ''Title 46 CFR Subchapter Q: Lifesaving, Electrical, and Engineering Equipment; Construction and Materials.'' This collection of information was approved by the Office of Management and Budget on December 10, 2002, and will expire after the 3-year approval period ends on December 31, 2005.

Federalism

A rule has implications for federalism under Executive Order 13132, Federalism, if it has a substantial direct effect on State or local governments or would either preempt State law or impose a substantial direct cost of compliance on them. Based on our survey of vessels expected to be effected, we have identified only 26 state-owned vessels that may be affected, and these vessels are already subject to regulation under the sections affected by the proposed amendments. Therefore, we conclude the proposed rule would not impose a substantial direct cost of compliance on State or local governments.

It is well settled that States may not regulate in categories reserved for regulation by the Coast Guard. It is also well settled, now, that all of the categories covered in 46 U.S.C. 3306, 3703, 7101, and 8101 (design, construction, alteration, repair, maintenance, operation, equipping, personnel qualification, and manning of vessels), as well as the reporting of casualties and any other category in which Congress intended the Coast Guard to be the sole source of a vessel's obligations, are within the field

foreclosed from regulation by the States. (See the decision of the Supreme Court in the consolidated cases of *United States* v. *Locke* and *Intertanko* v. *Locke,* 529 U.S. 89, 120 S. Ct. 1135 (March 6, 2000)). Our proposed rule would revise standards for pollution prevention equipment. Because the States may not regulate within this category, preemption under Executive Order 13132 is not an issue.

Unfunded Mandates Reform Act

The Unfunded Mandates Reform Act of 1995 (2 U.S.C. 1531–1538) requires Federal agencies to assess the effects of their discretionary regulatory actions. In particular, the Act addresses actions that may result in the expenditure by a State, local, or tribal government, in the aggregate, or by the private sector of $100,000,000 or more in any one year. Though this proposed rule would not result in such an expenditure, we do discuss the effects of this rule elsewhere in this preamble.

Taking of Private Property

This proposed rule would not effect a taking of private property or otherwise have taking implications under Executive Order 12630, Governmental Actions and Interference with Constitutionally Protected Property Rights.

Civil Justice Reform

This proposed rule meets applicable standards in sections 3(a) and 3(b)(2) of Executive Order 12988, Civil Justice Reform, to minimize litigation, eliminate ambiguity, and reduce burden.

Protection of Children

We have analyzed this proposed rule under Executive Order 13045, Protection of Children from Environmental Health Risks and Safety Risks. This rule is not an economically significant rule and would not create an environmental risk to health or risk to safety that might disproportionately affect children.

Indian Tribal Governments

This proposed rule does not have tribal implications under Executive Order 13175, Consultation and Coordination with Indian Tribal Governments, because it would not have a substantial direct effect on one or more Indian tribes, on the relationship between the Federal Government and Indian tribes, or on the distribution of power and responsibilities between the Federal Government and Indian tribes.

Energy Effects

We have analyzed this proposed rule under Executive Order 13211, Actions Concerning Regulations That Significantly Affect Energy Supply, Distribution, or Use. We have determined that it is not a ''significant energy action'' under that order because it is not a ''significant regulatory action'' under Executive Order 12866 and is not likely to have a significant adverse effect on the supply, distribution, or use of energy. The Administrator of the Office of Information and Regulatory Affairs has not designated it as a significant energy action. Therefore, it does not require a Statement of Energy Effects under Executive Order 13211.

Technical Standards

The National Technology Transfer and Advancement Act (NTTAA) (15 U.S.C. 272 note) directs agencies to use voluntary consensus standards in their regulatory activities unless the agency provides Congress, through the Office of Management and Budget, with an explanation of why using these standards would be inconsistent with applicable law or otherwise impractical. Voluntary consensus standards are technical standards (*e.g.*, specifications of materials, performance, design, or operation; test methods; sampling procedures; and related management systems practices) that are developed or adopted by voluntary consensus standards bodies.

This proposed rule uses the following new voluntary consensus standards:

1. IMO Assembly Resolution A.393(X)—Recommendation on International Performance and Test Specifications For Oily-Water Separating Equipment and Oil Content Meters;
2. IMO Assembly Resolution A.496(XII)—Guidelines and Specifications for Oil Discharge Monitoring and Control Systems for Oil Tankers;
3. IMO Assembly Resolution A.586(14)—Revised Guidelines and Specifications for Oil Discharge Monitoring and Control Systems for Oil Tankers;
4. IMO Marine Environment Protection Committee Resolution MEPC.13(19)—Guidelines for Plan Approval and Installation Survey of Oil Discharge Monitoring and Control Systems for Oil Tankers and Environmental Testing of Control Sections Thereof;
5. IMO Marine Environment Protection Committee Resolution MEPC.108(49)—Revised Guidelines and Specifications for Oil Discharge Monitoring and Control Systems for Oil Tankers;
6. International Organization of Standardization Standard ISO 8217 (1996) Petroleum products—Fuels (class F)—Specification of marine fuels;
7. International Organization of Standardization Standard ISO 9377–2 (2000), Water Quality—Determination of hydrocarbon oil index—Part 2: Method Using solvent extraction and Gas Chromatography.

The proposed sections that reference these standards and the locations where these standards are available are listed in 33 CFR 157.02 and 46 CFR 162.050–4.

Environment

We have analyzed this proposed rule under Commandant Instruction M16475.lD, which guides the Coast Guard in complying with the National Environmental Policy Act of 1969 (NEPA) (42 U.S.C. 4321–4370f), and have concluded that there are no factors in this case that would limit the use of a categorical exclusion under section 2.B.2 of the Instruction. Therefore, this rule is categorically excluded, under figure 2–1, paragraph (34)(e), of the Instruction, from further environmental documentation. These regulations concern equipment approval and carriage requirements. A preliminary ''Environmental Analysis Check List'' is available in the docket where indicated under the ''Public Participation and Request for Comments'' section of this preamble. Comments on this section will be considered before we make the final decision on whether this rule should be categorically excluded from further environmental review.

List of Subjects

33 CFR Part 155

Alaska, Hazardous substances, Oil pollution, Reporting and recordkeeping requirements.

33 CFR Part 157

Cargo vessels, Incorporation by reference, Oil pollution, Reporting and recordkeeping requirements.

46 CFR Part 162

Fire prevention, Incorporation by reference, Marine safety, Oil pollution, Reporting and recordkeeping requirements.

For the reasons discussed in the preamble, the Coast Guard proposes to amend 33 CFR parts 155 and 157, and 46 CFR part 162 as follows:

Title 33—Navigation and Navigable Waters

PART 155—OIL OR HAZARDOUS MATERIAL POLLUTION PREVENTION REGULATIONS FOR VESSELS

1. Revise the authority citation for part 155 to read as follows:

Authority: 33 U.S.C. 1231, 1321(j); E.O. 11735, 3 CFR, 1971–1975 Comp., p. 793; Department of Homeland Security Delegation No. 0170.1. Sections 155.100 through 155.130, 150.350 through 155.400, 155.430, 155.440, 155.470, 155.1030(j) and (k), and 155.1065(g) are also issued under 33 U.S.C. 1903(b). Sections 155.480, 155.490, 155.750(e), and 155.775 are also issued under 46 U.S.C. 3703. Section 155.490 is also issued under section 4110(b) of Pub. L. 101–380. Note: Additional requirements for vessels carrying oil or hazardous materials are contained in 46 CFR parts 30 through 40, 150, 151, and 153.

2. In § 155.380, revise the section heading and paragraph (c) to read as follows:

§ 155.380 Oily-water separating equipment and bilge alarm approval standards.

* * * * *

(c) A ship that is required to have a bilge alarm may defer installment and use a previously installed bilge monitor provided the bilge monitor met Coast Guard approval requirements at the time of its installation and it does not allow more than a 15 ppm oil content in water discharge.

PART 157—RULES FOR THE PROTECTION OF THE MARINE ENVIRONMENT RELATING TO TANK VESSELS CARRYING OIL IN BULK

3. Revise the authority citation for part 157 to read as follows:

Authority: 33 U.S.C. 1903; 46 U.S.C. 3703, 3703a (note); Department of Homeland Security Delegation No. 0170.1. Subparts G, H, and I are also issued under section 4115(b), Pub. L. 101–380, 104 Stat. 520; Pub. L. 104–55, 109 Stat. 546.

4. In § 157.02, revise paragraph (b) to read as follows:

§ 157.02 Incorporation by reference.

* * * * *

(b) The material approved for incorporation by reference in this part and the sections affected, are as follows:

International Maritime Organization (IMO)—4 Albert Embankment, London SE1 7SR, United Kingdom.

IMO Assembly Resolution A.393(X), Recommendation on International Performance and Test Specifications For Oily-Water Separating Equipment and Oil Content Meters—157.12

IMO Assembly Resolution A.496(XII), Guidelines and Specifications for Oil Discharge Monitoring and Control Systems for Oil Tankers—157.12

IMO Assembly Resolution A.586(14), Revised Guidelines and Specifications for Oil Discharge Monitoring and Control Systems for Oil Tankers—157.12

IMO Marine Environment Protection Committee Resolution MEPC.13(19), Guidelines for Plan Approval and Installation Survey of Oil Discharge Monitoring and Control Systems for Oil Tankers and Environmental Testing of Control Sections Thereof—157.12

IMO Marine Environment Protection Committee Resolution MEPC.108(49), Revised Guidelines and Specifications for Oil Discharge Monitoring and Control Systems for Oil Tankers—157.12

IMO Assembly Resolution A.601(15), Provision and Display of Manoeuvring Information on Board Ships, Annex sections 1.1, 2.3, 3.1, and 3.2 with appendices, adopted on 19 November 1987—157.450

IMO Assembly Resolution A.744(18), Guidelines on the Enhanced Programme of Inspections During Surveys of Bulk Carriers and Oil Tankers, Annex B sections 1.1.3–1.1.4, 1.2–1.3, 2.1, 2.3–2.6, 3–8, and Annexes 1–10 with appendices, adopted 4 November 1993—157.430

IMO Assembly Resolution A.751(18), Interim Standards for Ship Manoeuvrability, Annex sections 1.2, 2.3–2.4, 3–4.2, and 5, adopted 4 November 1993 with Explanatory Notes in MSC/Circ. 644 dated 6 June 1994—157.445

Oil Companies International Marine Forum (OCIMF) 27 Queen Anne's Gate, London, SW1H 9BU, England].

International Safety Guide for Oil Tankers and Terminals, Fourth Edition, Chapters 6, 7, and 10, 1996—157.435

5. In § 157.12, revise paragraphs (b) and (c) to read as follows:

§ 157.12 Cargo monitor and control system.

* * * * *

(b) Each monitor installed on a U.S. vessel must be approved under 46 CFR 162.050. Each monitor installed on a foreign vessel must be approved:

(1) Under 46 CFR 162.050; or

(2) As meeting IMO Marine Environment Protection Committee resolution MEPC.108(49) by a country that has ratified the MARPOL 73/78. Paragraph 1.2.2 of MEPC.108(49) provides, as to equipment installed in ''oil tankers the keels of which are laid, or which are at a similar stage of construction, before January 1, 2005,'' for alternative compliance with IMO resolutions A.393(X), A.496(XII), MEPC.13(19), and A.586(14). These five resolutions are incorporated by reference (see § 157.02).

(c) Each monitor on a U.S. vessel must be installed in accordance with §§ 157.12b through 157.12g.

6. Add §§ 157.12a through 157.12g to read as follows:

§ 157.12a Definitions.

As used in §§ 157.12a through 157.12g—

Control section means a unit in a monitoring system composed of the items specified in § 157.12d(a)(4)(viii).

Control unit means a device that receives automatic signals of oil content of the effluent ppm, flow rate of discharge m^3/hour, ship's speed in knots, ship's position—latitude and longitude, date and time (GMT, Greenwich Mean Time), and status of the overboard discharge control. The control unit makes automatic recordings of data as specified in § 157.12d(h)(2).

Oil discharge monitoring and control system or *monitoring system* means a system that monitors the discharge into the sea of oily ballast or other oil-contaminated water from the cargo tank areas and comprises the items specified in § 157.12d(a)(4).

Overboard discharge control means a device that automatically initiates the sequence to stop the overboard discharge of the effluent in alarm conditions and prevents the discharge throughout the period the alarm condition prevails. The device may be arranged to close the overboard valves or to stop the relevant pumps, as appropriate.

PPM or *ppm* means parts of oil per million parts of water by volume.

Starting interlock means a facility that prevents the initiation of the opening of the discharge valve or the operation of other equivalent arrangements before the monitoring system is fully operational when use of the monitoring system is required by the Convention.

§ 157.12b Implementation requirements.

Oil discharge monitoring and control systems must be fitted to oil tankers to which this subpart applies. A monitoring and control system must employ a control unit and be fitted with a starting interlock and overboard discharge control.

§ 157.12c Construction, maintenance, security, calibration and training.

(a) The oil discharge monitoring and control system must be designed to

ensure that user access is restricted to essential controls. Access beyond these controls must be available for emergency maintenance and temporary repair but must require the breaking of security seals or activation of another device which indicates an entry to the equipment.

(b) The seals must be of a design that only the manufacturer or the manufacturer's agent can replace the seals or reset the system following inspection and permanent repairs to the equipment.

(c) The accuracy of the monitoring system must be verified during International Oil Pollution Prevention certificate renewal surveys. The calibration certificate certifying date of last calibration check must be retained on board for inspection purposes.

(d) The monitoring system may have several scales as appropriate for its intended use. The recording device fitted to a meter which has more than one scale must indicate the scale which is in use.

(e) Simple means must be provided aboard ship to check on instrument drift must be limited; repeatability of the instrument reading, and the ability to re-zero the instrument.

(f) Ship staff training must include familiarization in the operation and the maintenance of the equipment.

(g) The routine maintenance of the monitoring system and troubleshooting procedures must be clearly defined in the Operating and Maintenance Manual. All routine maintenance and repairs must be recorded.

§ 157.12d Technical specifications.

(a) *Oil discharge monitoring and control system.* (1) The monitoring system must be capable of effectively monitoring and controlling the discharge of any effluent into the sea through those overboard discharge outlets permitted by § 157.11 that are necessary to fulfill the operational requirements of the oil tanker.

(2) The discharge of dirty ballast water or other oil-contaminated water from the cargo tank areas into the sea through outlets which are not controlled by the monitoring system is prohibited.

(3) The monitoring system must function effectively under all environmental conditions that oil tankers normally encounter, and must be designed and constructed to satisfy the specifications for approval in 46 CFR subpart 162.050. Moreover—

(i) The system must be designed so that no discharge of dirty ballast or other oil-contaminated water from the cargo tank areas can take place unless the monitoring system is in the normal operating mode and the relevant sampling point has been selected;

(ii) Preferably the system should sample the effluent discharge from a minimum number of discharge outlets and be arranged so that discharge overboard can take place via only one outlet at a time;

(iii) Where it is intended that more than one line be used for simultaneous discharging purposes, one cargo monitor, together with a flow meter, must be installed in each discharge line. These instruments must be connected to a common processor; and

(iv) To avoid alarms because of short-term high oil concentration signals (spikes) causing indications of high instantaneous rates of discharge, the short-term high ppm signal may be suppressed for a maximum of 10 seconds. Alternatively, the instantaneous rate of discharge may be continuously averaged during the preceding 20 seconds or less as computed from instantaneous ppm values of the cargo monitor readings received at intervals not exceeding 5 seconds.

(4) The monitoring system must comprise—

(i) A cargo monitor to measure the oil content of the effluent in ppm. The monitor must be approved in accordance with the provisions contained in 46 CFR 162.050 and be certified to take into account the range of cargoes carried;

(ii) A flow rate indicating system to measure the rate of effluent being discharged into the sea;

(iii) A ship speed indicating device to give the ship's speed in knots;

(iv) A ship position indicating device to give the ship's position—latitude and longitude;

(v) A sampling system to convey a representative sample of the effluent to the cargo monitor;

(vi) An overboard discharge control to stop the overboard discharge;

(vii) A starting interlock to prevent the discharge overboard of any effluent unless the monitoring system is fully operational; and

(viii) A control section comprising—

(A) A processor that accepts signals of oil content in the effluent, the effluent flow rate and the ship's speed, and computes these values into liters of oil discharged per nautical mile and the total quantity of oil discharged;

(B) A means to provide alarms and command signals to the overboard discharge control;

(C) A recording device to provide a record of data required under § 157.12d(h)(2);

(D) A data display to exhibit the current operational data required under § 157.12d(i);

(E) A manual override system to be used in the event of failure of the monitoring system; and

(F) A means to provide signals to the starting interlock to prevent the discharge of any effluent before the monitoring system is fully operational.

(5) Each main component of the monitoring system must be fitted with a name-plate, properly identifying the component by assembly drawing number, type or model number and serial number, as appropriate.

(6) The electrical components of the monitoring system that are to be installed in an explosive atmosphere must be in compliance with 46 CFR 162.050–25.

(b) *Sampling system.* (1) Sampling points must be located so that relevant samples can be obtained from those outlets that are used for operational discharges in accordance with paragraph (a) of this section. The sampling probes located in the overboard discharge lines and the piping system connecting the sampling probes to the cargo monitor must meet the requirements of this paragraph.

(2) The piping and probes must be of a material resistant to fire, corrosion, and oil and be of adequate strength, and properly jointed and supported.

(3) The system must have a stop-valve fitted adjacent to each probe, except that, where the probe is mounted in a cargo line, two stop-valves must be fitted, in series, in the sample line; one of these may be the remote controlled sample selector valve.

(4) Sampling probes must be arranged for easy withdrawal and must, as far as practicable, be mounted at an accessible location in a vertical section of the discharge line. Should it be necessary to fit sampling probes in a horizontal section of the discharge line it must be ascertained, during the installation survey, that the pipe runs full of liquid at all times during the discharge of the effluent. Sampling probes must normally penetrate inside the discharge pipe to a distance of one quarter the diameter of that pipe.

(5) Means must be provided for cleaning the probes and piping system by the provision of permanent clean water flushing arrangements or an equivalent method. The design of the probes and piping must be such as to minimize their clogging by oil, oily residue, and other matter.

(6) The velocity of the fluid in the piping must be such that, taking into consideration the length of the piping, the overall response time must be as

short as possible between an alteration in the mixture being pumped and the alteration in the cargo monitor reading and in any case not more than 40 seconds, including the response time of the cargo monitor.

(7) The location of sampling probes in relation to any point of flow diversion to a slop tank must be selected with regard to the need for sampling the oily water in the recirculation mode.

(8) The arrangements for driving the sampling pump or any other pumps used in the system must account for the safety requirements of the space in which the pump is located. Any bulkhead penetration between a hazardous and a non-hazardous area must be of a design meeting the requirements of 46 CFR 32.60–20 and 46 CFR subpart 111.105.

(9) The flushing arrangement must be such that where necessary it can be utilized for test-running and stabilizing the cargo monitor and correcting for zero setting.

(10) Sample water returning to the slop tank must not be allowed to free-fall into the tank. In tankers equipped with an inert gas system, a water seal meeting the requirements of 46 CFR 32.53–10(b) must be arranged in the piping leading to a slop tank.

(11) A valve must be provided for the manual collection of samples from the inlet piping to the cargo monitor at a point downstream of any sampling pump.

(c) *Flow rate indicating system.* (1) A flow meter for measuring the rate of discharge must be installed in a vertical section of a discharge line or in any other section of a discharge line as appropriate, so as to be always filled with the liquid being discharged.

(2) A flow meter must employ an operating principle which is suitable for shipboard use and, where relevant, can be used in large diameter pipes.

(3) A flow meter must be suitable for the full range of flow rates that may be encountered during normal operation. Alternatively, arrangements such as the use of two flow meters of different ranges or a restriction of the operational flow rate range may be employed if necessary to meet this requirement.

(4) The flow meter, as installed, must have an accuracy of ±10 percent, or better, of the instantaneous rate of discharge throughout the operating range for discharging the effluent.

(5) Any component part of the flow meter in contact with the effluent should be of corrosion-resistant and oil-resistant material of adequate strength.

(6) The design of the flow metering arrangements must account for the safety requirements of the space in which such metering arrangements are located.

(d) *Ship's speed indicating system.* The automatic speed signal required for a monitoring system must be obtained from the ship's speed indicating device by means of a repeater signal. The speed information used may be either speed over the ground or speed through the water, depending upon the speed measuring equipment installed on board.

Note to paragraph (d): See ''Recommendation on Performance Standards for Devices to Indicate Speed and Distance,'' Annex to resolution A.824(19) as amended by resolution MSC.96(72).

(e) *Ship position indicating device.* The ship position indicating device must consist of a receiver for a global navigation satellite system or a terrestrial radio navigation system, or other means, suitable for use at all times throughout the intended voyage to establish and update the ship's position by automatic means.

(f) *Overboard discharge control management.* The overboard discharge control must be able to stop the discharge of the effluent into the sea automatically by either closing all relevant overboard discharge valves or stopping all relevant pumps. The discharge control arrangement must be fail-safe so that all effluent discharge is stopped when the monitoring system is not in operation, at alarm conditions, or when the monitoring system fails to function.

(g) *Processor and transmitting device.* (1) The processor of a control section must receive signals from the cargo monitor, the flow rate indicating system and the ship's speed indicating system at time intervals not exceeding 5 seconds and must automatically compute the following:

(i) Instantaneous rate of discharge of oil in liters per nautical mile; and

(ii) Total quantity of oil discharged during the voyage in cubic meters or liters.

(2) When the limits imposed by § 157.37(a)(3) and (4) are exceeded, the processor must provide alarms and provide command signals to the overboard discharge control arrangement which will cause the discharge of effluent into the sea to stop.

(3) The processor must normally include a device for the continuous generation of time and date information. Alternative arrangements which ensure the automatic and continuous reception of time and date information from an external source may be approved by the Marine Safety Center.

(4) In the event of power failure the processor must retain its memory in respect to computation of the total quantity of oil discharged, time, and date. A printout of data must be obtained when the monitoring system is operating with manual override, but the printout of data is not required if, when the power fails, the monitoring system activates the overboard discharge control to stop the discharge of effluent.

(h) *Recording devices.* (1) The recording device of a control section must include a digital printer, which may be formatted electronically. The recorded parameters must be explicitly identified on the printout. The printout must be legible and must remain so once removed from the recording device and must be retained for at least 3 years.

(2) The data to be automatically recorded must include at least the following:

(i) Instantaneous rate of discharge of oil (liters per nautical mile);

(ii) Instantaneous oil content (ppm);

(iii) The total quantity of oil discharged (cubic meters or liters);

(iv) Time and date (GMT, Greenwich Mean Time);

(v) Ship's speed in knots;

(vi) Ship's position—latitude and longitude;

(vii) Effluent flow rate;

(viii) Status of the overboard discharge control or arrangement;

(ix) Oil type selector setting, where applicable;

(x) Alarm condition;

(xi) Failure, including, but not limited to, no flow, or fault; and

(xii) Override action, including, but not limited to, manual override, flushing, and calibration. Any information inserted manually as a result of an override action must be identified as such on the printout.

(3) Data required in paragraph (h)(2) of this section must be printed out or may be stored electronically with printout capability, with the following minimum frequency:

(i) When the discharge is started;

(ii) When the discharge is stopped;

(iii) At intervals of not more than 10 minutes (except when the system is in stand-by mode);

(iv) When an alarm condition develops;

(v) When normal conditions are restored;

(vi) Whenever the computed rate of discharge varies by 10 liters per nautical mile;

(vii) When zero-setting or calibration modes are selected; and

(viii) On manual command.

(4) The recording device must be located in a position easily accessible to

the person in charge of the overboard discharge operation.

(i) *Data display.* (1) In addition to the recorded printout, the current data must be visibly displayed and must as a minimum contain the following:

(i) Instantaneous rate of discharge of oil (liters per nautical mile);

(ii) Total quantity of oil discharged (cubic meters or liters);

(iii) Instantaneous oil content (ppm)

(iv) Flow rate;

(v) Ship's speed; and

(vi) Status of the overboard discharge control or arrangement.

(2) The data display must be located in a position easily observed by the person in charge of the overboard discharge operation.

(j) *Manually operated alternatives in the event of equipment malfunction.* Acceptable alternative means of obtaining information in the event of a failure in the monitoring system include the following:

(1) Cargo monitor or sampling system: visual observation of the surface of the water adjacent to the effluent discharge;

(2) Flow meter: pump discharge characteristics;

(3) Ship's speed indicating device: main engine rpm;

(4) Processor: manual calculation and manual recording; and

(5) Overboard discharge control: manual operation of pumps and valves.

(k) *Alarm conditions resulting in the stopping of discharge.* Audio-visual alarms must be activated for any of the following conditions and the monitoring system must be so arranged that the discharge of effluent into the sea is stopped:

(1) Whenever the instantaneous rate of discharge of oil exceeds 30 liters per nautical mile;

(2) When the total quantity of oil discharged reaches 1/30,000 of the previous cargo for new vessels and 1/15,000 for existing vessels;

(3) In the event of failure of the system's operation, such as:

(i) Power failure;

(ii) Loss of sample;

(iii) Significant failure of the measuring or recording system; or

(iv) When the input of any sensor exceeds the effective capacity of the system.

(l) *Location of alarm indicator.* The alarm indicator of the system must be installed in the cargo control room, where provided, and/or in other places where it will attract immediate attention and action.

§ 157.12e Certificate of approval.

(a) A copy of the certificate of approval for the cargo monitors must be carried aboard an oil tanker fitted with such equipment at all times.

(b) A certificate of type approval must be issued for the specific application for which the cargo monitor is approved, that is, for crude oil, ''black'' products, ''white'' products, or other products or applications as listed on the certificate.

§ 157.12f Workshop functional test requirements.

(a) Each cargo monitor and each control section of a monitoring system must be subjected to a functional test on a suitable test bench prior to delivery. The detailed program for a functional test of such equipment must be developed by the manufacturer, taking into account the features and functions of the specific design of equipment. A completed workshop certificate including the delivery test protocol must be received with each unit delivered.

(b) A functional test conducted on a cargo monitor must include at least all the following operations:

(1) Check flow rate, pressure drop, or an equivalent parameter as appropriate;

(2) Check all alarm functions built into the meter;

(3) Check all switching functions interconnecting with other parts of the system; and

(4) Check correct reading at several ppm values on all measurement scales when operated on an oil appropriate for the application of the cargo monitor or by an equivalent method.

(c) A functional check conducted on a control section of a monitoring system must include at least all the following operations:

(1) Check all alarm functions;

(2) Check correct function of the signal processor and the recording equipment when simulated input signals of ppm, flow rate, and speed are varied;

(3) Check that the alarm is activated when the input signals are varied to exceed the discharge limits contained in § 157.37(a)(3) and (4).

(4) Check that a signal is given to the overboard discharge control when alarm conditions are reached; and

(5) Check that the alarm is activated when each one of the input signals is varied to exceed the capacity of the system.

§ 157.12g Plan approval requirements.

Adequate documentation must be prepared well in advance of the intended installation of a monitoring system and must be submitted to the Marine Safety Center for approval. The documentation to be submitted must include at least all the following:

(a) A description of the monitoring system. The description must include a diagrammatic drawing of the pumping and piping arrangements, identifying the operational outlets for dirty ballast and oil-contaminated water from the cargo tank area and compatible with the operational requirements set out in the oil tanker's cargo and ballast handling manuals. Special considerations may have to be given to installations in oil tankers which have unusual pumping and piping arrangements.

(b) Equipment manuals, supplied by manufacturers, which must contain details of the major components of the monitoring system.

(c) An operations and technical manual for the complete monitoring system which is proposed to be installed in the oil tanker. This manual must cover the arrangements and operation of the system as a whole and must specifically describe parts of the system which are not covered by the manufacturer's equipment manuals.

(d) The operations section of the manual must include normal operational procedures and procedures for the discharge of oily water in the event of malfunction of the equipment.

(e) The technical section of the manual must include adequate information (description and diagrammatic drawings of the pumping and piping arrangements of the monitoring system and electrical/electronic wiring diagrams) to enable fault finding and must include instructions for keeping a maintenance record.

(f) A technical installation specification defining, among other things, the location and mounting of components, arrangements for maintaining the integrity of the boundary between safe and hazardous spaces and the arrangement of the sample piping, including calculation of the sample response time referred to in § 157.12d(b)(6). The installation must comply with manufacturer's specific installation criteria.

(g) A copy of the certificate of type approval for the cargo monitor and technical documentation relevant to other main components of the monitoring system.

(h) A recommended test and checkout procedure specific to the monitoring system installed. This procedure must specify all the checks to be carried out in a functional test by the installation contractor and must provide guidance for the surveyor when carrying out the on-board survey of the monitoring system and confirming the installation reflects the manufacturer's specific installation criteria.

7. Revise § 157.39(b)(3) to read as follows:

§ 157.39 Machinery space bilges.

* * * * *

(b) * * *

(3) Has in operation an oil discharge monitoring and control system in compliance with § 157.12 and oil separating equipment in compliance with 33 CFR 155.380.

Appendix F to Part 157—[Removed and Reserved]

8. Remove and reserve Appendix F to part 157.

Title 46—Shipping

PART 162—ENGINEERING EQUIPMENT

9. Revise the authority citation for part 162 to read as follows:

Authority: 33 U.S.C. 1321(j), 1903; 46 U.S.C. 3306, 3703, 4104, 4302; E.O. 12234, 45 FR 58801, 3 CFR, 1980 Comp., p. 277; E.O. 11735, 38 FR 21243, 3 CFR, 1971–1975 Comp., p. 793; Department of Homeland Security Delegation No. 0170.1.

10. In § 162.050–1, revise paragraph (a)(1) to read as follows:

§ 162.050–1 Scope.

(a) * * *

(1) Procedures for approval of 15 ppm separators, cargo monitors, and bilge monitors.

* * * * *

11. Revise § 162.050–3 to read as follows:

§ 162.050–3 Definitions.

As used in this subpart—

15 ppm separator means a separator that is designed to remove enough oil from an oil-water mixture to provide a resulting mixture that has an oil concentration of 15 ppm or less.

Bilge alarm means an instrument that is designed to measure the oil content of oily mixtures from machinery space bilges and fuel oil tanks that carry ballast and activate an alarm at a set concentration limit and record date, time, alarm status, and operating status of the 15 ppm separator.

Cargo monitor means an instrument that is designed to measure and record the oil content of cargo residues from cargo tanks and oily mixtures combined with these residues.

Independent laboratory means a laboratory that—

(1) Has the equipment and procedures necessary to approve the electrical components described in §§ 162.050–21(b) and 162.050–25(c), or to conduct the test described in § 162.050–37(a); and

(2) Is not owned or controlled by a manufacturer, supplier, or vendor of separators, monitors, or bilge alarms.

PPM or *ppm* means parts per million by volume of oil in water.

Response time means the time elapsed between an alteration in the sample being supplied to the bilge alarm and the ppm display showing the correct response.

12. Revise § 162.050–4 to read as follows:

§ 162.050–4 Documents incorporated by reference.

(a) Certain material is incorporated by reference into this subpart with the approval of the Director of the Federal Register under 5 U.S.C. 552(a) and 1 CFR part 51. To enforce any edition other than that specified in paragraph (b) of this section, the Coast Guard must publish notice of change in the **Federal Register** and the material must be available to the public. All approved material is available for inspection at the National Archives and Records Administration (NARA). For information on the availability of this material at NARA, call 202–741–6030 or go to *http://www.archives.gov/federal_register/code_of_federal_regulations/ibr_locations.html*. Also, it is available for inspection at the Coast Guard, (G–MSE), 2100 Second Street SW., Washington, DC 20593–0001, and is available from the sources indicated in paragraph (b) of this section.

(b) The material approved for incorporation by reference in this part (subchapter), and the sections affected, are as follows:

Underwriters Laboratories, Inc., (UL) 12 Laboratory Drive, Research Triangle Park, NC 27709–3995.

Underwriters Laboratories Standard 913 (as revised April 8, 1976)—162.050–21, 162.050–25.

American Society for Testing and Materials 100 Barr Harbor Drive, West Conshohocken, PA 19428–2959.

ASTM D2777–98, Standard Practice for Determination of Precision and Bias of Applicable Test Methods of Committee D–19 on Water—162.050–15.

International Organization for Standardization (ISO) 1, rue de Varembé, Case postale 56, CH–1211 Geneva 20, Switzerland (Internet: *http://www.iso.org.*)

International Organization of Standardization Standard ISO 8217 (1996) Petroleum products—Fuels (class F)—Specification of marine fuels—162.050–20.

International Organization of Standardization Standard ISO 9377–2 (2000), Water Quality—Determination of hydrocarbon oil index—Part 2: Method Using solvent extraction and Gas Chromatography—162.050–39.

§ 162.050–5 [Amended]

13. In § 162.050–5, in paragraph (a), remove the abbreviation ''p.p.m.'', and add, in its place, the letters ''ppm''.

§ 162.050–7 [Amended]

14. In §162.050–7:

a. Remove paragraph (j);

b. Redesignate paragraph (k) as paragraph (j);

c. In paragraph (e), remove the word and figure ''fifty (50)'' wherever they appear and add, in their place, the figure ''50''; in paragraph (h)(3), following the figure ''3'', remove the letter ''S'' and add, in its place, the letter ''A''; and in paragraph (h)(4), following the figure ''5'', remove the letter ''S'' and add, in its place, the letter ''A'', and in redesignated paragraph (j)(2), remove the abbreviation ''p.p.m.'', and add, in its place, the letters ''ppm''; and

d. Revise paragraphs (f), (h)(2), (i)(2), and redesignated (j)(3) to read as follows:

§ 162.050–7 Approval procedures.

* * * * *

(f) The approval tests in this subpart must be performed by a facility designated under § 162.050–15. The facility must also be accepted as an independent laboratory by the Coast Guard under subpart 159.010 of this chapter. The facility must perform each test in accordance with the test conditions prescribed in this subpart for the test, prepare a test report for the item if it completes all of the tests, and send the report with three copies to the Commanding Officer, USCG Marine Safety Center. The applicant may observe the tests. If an item does not complete testing, a new application must be made before retesting.

* * * * *

(h) * * *

(2) The oil content of each sample of separated water effluent taken during approval testing is 15 ppm or less;

* * * * *

(i) * * *

(2) Each oil content reading recorded during approval testing is ±10 ppm or ±10 percent, whichever is greater, of the oil content of the sample influent mixture taken at the time of the reading;

* * * * *

(j) * * *

(3) Its response time is five seconds or less; and

* * * * *

§ 162.050–14 [Removed]

14A. Remove § 162.050–14.

15. In § 162.050–15, revise paragraphs (a), (d), (e), (f)(3) and (h) to read as follows:

§ 162.050–15 Designation of facilities.

(a) Each request for designation as a facility authorized to perform approval tests must be submitted to Commandant, G–MSE–3, 2100 2nd Street SW., Washington, DC 20593–0001.

* * * * *

(d) If the facility meets the requirements in paragraphs (g)(1) through (g)(4) of this section, they must obtain 12 samples containing mixtures of oil in water that are within a 10-to-30 ppm range that can be verified by an independent third-party source mutually acceptable to the applying lab and the Coast Guard prior to verification.

(e) The facility must measure the oil content of each sample using the method described in § 162.050–39 and report the value of each of the 12 measurements to Commandant, G–MSE–3, 2100 2nd St. SW., Washington, DC 20593–0001.

(f) * * *

(3) The absolute value of X_d must be smaller than u based on the following analysis of paired observations:

(i) Calculate the value of $\bar{X}_d$ and S_d. This is the mean and standard deviation, respectively, of the differences between the known sample concentrations and the values obtained by the facility with their equipment. The value of $\bar{X}_d$ for the 12 measurements described in paragraph (e) of this section, or for 11 measurements if paragraph (f)(2) of this section applies, must be within the range $-1 \leq \bar{X}_d \leq +1$.

(ii) Determine the appropriate critical value of the Student's t distribution with $(n-1)$ degrees of freedom for a confidence level of $\alpha=0.01$. If all 12 samples meet the criteria of paragraph (f)(1) of this section then $(n-1)=11$ and the critical value,

$$t_{1-\frac{a}{2}},$$

is 3.106. If paragraph (f)(2) of this section applies, then $(n-1)=10$ and

$$t_{1-\frac{a}{2}} = 3.169.$$

(iii) Compute the value of u, where

$$u = t_{1-\frac{a}{2}}\left(\frac{S_d}{\sqrt{n}}\right),$$

where n=12 if all samples meet the criteria of paragraph(f)(1) and n=11 if paragraph (f)(2) applies.

(iv) Compare the absolute value of $\bar{X}_d$ to the value of u. If $|\bar{X}_d|<u$, then the facility meets the criteria.

* * * * *

(h) A facility may not subcontract for approval testing unless previously authorized by the Coast Guard. A request for authorization to subcontract must be sent to Commandant, G–MSE–3, 2100 2nd Street, SW., Washington, DC 20593–0001.

16. In § 162.050–17, revise Figure 162.050–17(a) and paragraphs (b)(1), (b)(2), (c)(1), and (c)(3); in paragraph (d) remove the reference ''162.050–17(e)'' and add in its place the reference ''162.050–17(d)''; remove Figure 162.050–17(e) and add in its place Figure 162.050–17(d) to read as follows:

§ 162.050–17 Separator test rig.

* * * * *

FIGURE 162.050-17(a) - SEPARATOR TEST RIG

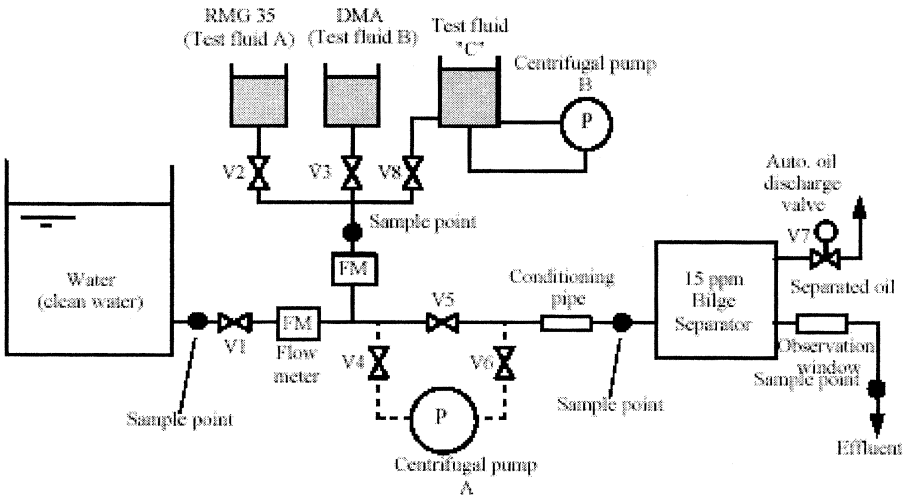

BILLING CODE 4910–15–C

(b) * * *

(1) Be a centrifugal pump capable of operating at 1,000 revolutions per minute or more;

(2) Have a delivery capacity of at least 1.5 times the maximum throughput at which the separator being tested is designed to operate;

* * * * *

(c) * * *

(1) Influent water flows at a Reynolds Number of at least 10,000;

* * * * *

(3) Its length is at least 20 times its inside diameter.

* * * * *

FIGURE 162.050-17(d) - SAMPLE POINT

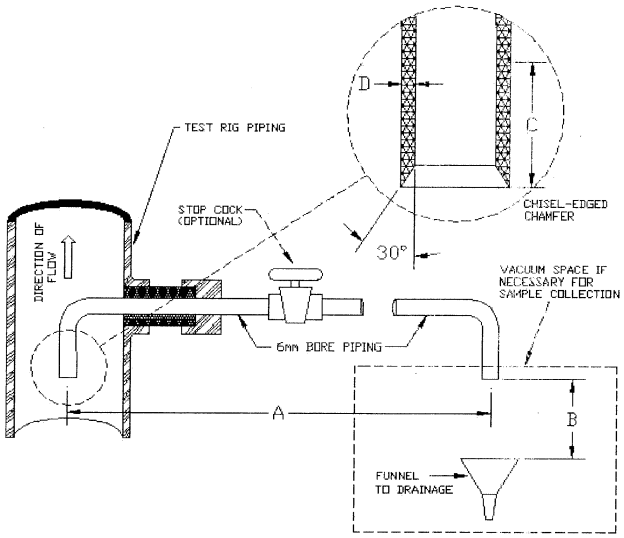

A DIMENSION A IS NOT GREATER THAN 400 MM
B HEIGHT B IS LARGE ENOUGH TO INSERT A SAMPLE BOTTLE
C DISTANCE C IS A STRAIGHT LINE OF NOT LESS THAN 60 MM
D WIDTH D IS NOT GREATER THAN 2 MM

§ 162.050–19 [Amended]

17. In § 162.050–19(c), remove the words and figure ''one thousand (1,000)'' and add, in their place, the figure ''1,000''; and revise Figure 162.050–19 to read as follows:

FIGURE 162.050-19 - MONITOR AND BILGE ALARM TEST RIG

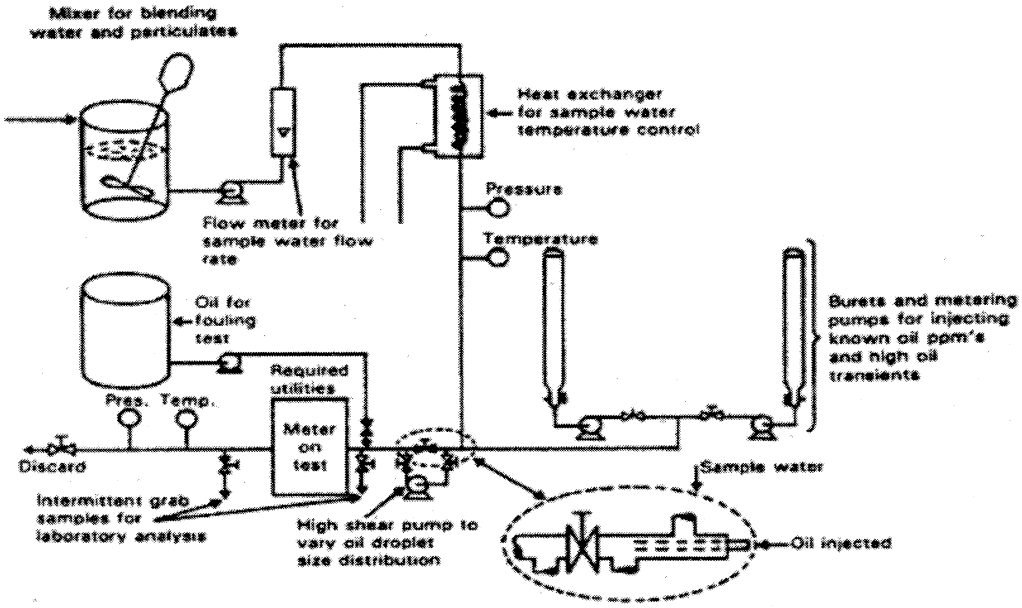

BILLING CODE 4910–15–C

18. Add § 162.050–20 to read as follows:

§ 162.050–20 Separator and bilge alarm test fluids.

(a) Tests required in § 162.050–23 and § 162.050–35 shall be performed using the following three types of test fluids:

(1) Test Fluid A which is a marine residual fuel oil in accordance with ISO 8217 (Incorporated by reference, see § 162.050–4), type RMG 35 (density at 15 °C not less than 980 kg/m^3);

(2) Test Fluid B which is a marine distillate fuel oil in accordance with ISO 8217, type DMA (density at 15 °C not less than 830 kg/m^3);

(3) Test Fluid C must be a mixture of an oil-in-fresh-water emulsion, where 1 kg of the mixture consists of:

(i) 947.8 g of fresh water;

(ii) 25.0 g of Test Fluid A;

(iii) 25.0 g of Test Fluid B;

(iv) 0.5 g of surfactant (sodium salt of dodecylbenzene sulfonic acid) in the dry form; and

(v) 1.7 g of iron oxides, a black ferrosoferric oxide (Fe_3O_4) with a particle size distribution of which 90 percent is less than 10 microns, the remainder having a maximum particle size of 100 microns.

(b) Test Fluid C must be prepared as needed for § 162.050–23 or § 162.050–35 by the following procedures:

(1) Measure out 1.2 times the quantity of surfactant required from the WORKSHEET FOR DETERMINING CONSTITUENTS OF TEST FLUID C, see figure 162.050–20;

(2) Mix it with fresh water and stir well in a small container to make a mixture until the surfactant has been thoroughly dissolved;

(3) Fill clean test fluid tank with fresh water with a quantity 1.2 times the volume of the total quantity of water in the Test Fluid C needed for the test described in § 162.050–23 and § 162.050–35;

(4) Operate the centrifugal pump B running at a speed of not less than 3,000 rpm with a flow rate at which the volume of the test fluid has been changed out at least once per minute;

(5) Add the surfactant mixture from paragraph (b)(2) of this section first, followed by oil and suspended solids (iron oxides) respectively, both 1.2 times the required amounts, to the fresh water in the tank;

(6) To establish a stable emulsion, keep running the centrifugal pump B for one hour and confirm no oil floats on the surface of the test fluid; and

(7) After the one hour stated in paragraph (b)(6) of this section, keep running the centrifugal pump B at reduced speed to approximately 10 percent of original flow rate, until the end of the test.

Figure 162.050–20—Worksheet for Determining Constituents of Test Fluid C

1. Determine volumetric flow rate of separator in m^3/hr.

2. Determine net volume of fluid needed for testing with fluid C:

a. Multiply Volumetric flow rate × 3 hours = Net volume (assumes conditioning time of approximately 30 minutes added to 2½-hour test period)

3. Determine Volume of Test Fluid C:

a. Multiply Net Volume * 0.06 = Fluid C Volume

4. Determine amounts of constituents:

a. Volume of Test Fluid C: 1.2 × Net Volume;

b. Volume of Fresh Water in Test Fluid C: 0.9478 × Volume of Test Fluid C;

c. Weight of Test Fluid A: 25 × Volume of Test Fluid C;

d. Weight of Test Fluid B: 25 × Volume of Test Fluid C;

e. Weight of Surfactant: 0.5 × Volume of Test Fluid C; and

f. Weight of iron oxide: 1.7 × Volume of Test Fluid C.

Example

1. Bilge separator is rated at $2m^3$/hr;

2. Net Volume needed for the Test: Volume of test water: $2m^3 \times 3$ hours = $6m^3$;

3. Volume Test Fluid C: 6 percent of test water = $0.06 \times 6m^3 = 0.36m^3$;

4. Actual Volume to be prepared:

a. Volume of Test Fluid C to be prepared: 1.2 times the Net Volume of Test Fluid C = $1.2 \times 0.36 = 0.432m^3$;

b. Volume of fresh water in Test Fluid C: (947.8g/1000g) of Test Fluid C = $0.9478 \times 0.432 = 0.4094m^3$;

c. Weight of Test Fluid A: (25g/1000g) of Test Fluid C = $25/1000 \times 0.432 \times 1000$ = 10.8kg;

d. Weight of Test Fluid B: (25g/1000g) of Test Fluid C = $25/1000 \times 0.432 \times 1000$ = 10.8kg;

e. Weight of surfactant: (0.5g/1000g) of Test Fluid C = $0.5/1000 \times 0.432 \times 1000$ = 0.216kg; and

f. Weight of iron oxide: (1.7g/1000g) of Test Fluid C) = $1.7/1000 \times 0.432 \times 1000 \times 0.734$kg.

19. In § 162.050–21—

a. In paragraph (b), add the words ''(Incorporated by reference, see § 162.050–4)'' immediately after the words ''(dated April 8, 1976)''.

b. In paragraph (e), remove the words and figure ''twenty-four (24)'' and add, in their place, the figure ''24''.

20. In § 162.050–23—

a. Remove paragraphs (a)(2), (c), (d), (e), (f), and (g);

b. Redesignate paragraphs (a)(3) through (a)(13) as paragraphs (a)(2) through (a)(12);

c. In newly designated paragraph (a)(11), remove the word and figure ''one (1)'' and add, in their place, the figure ''1'' and, in newly designated paragraph (a)(12), following the words ''Test No. 5'', remove the letter ''S'' and add, in its place, the letter ''A''; and

d. Revise newly designated paragraph (a)(4) to read as set out below; and add new paragraphs (b), (c), and (d) to read as follows:

§ 162.050–23 Separator: Approval tests.

(a) * * *

(4) The influent water used in each test must be clean fresh water or clean fresh water in solution with sodium chloride. In either case, the relative density of the water must be no greater than 1.015 at 20 °C.

* * * * *

(b) The following tests must be conducted using Test Fluid A:

(1) *Test No. 1A.* The separator is filled with water and started. It is first fed with pure Test Fluid A for at least 5 minutes and then with a mixture of Test Fluid A and water influent containing Fluid A content of between 5,000 and 10,000 ppm until a steady flow rate occurs. After the flow rate is steady, the influent is fed to the separator for 30 minutes. Samples of separated water effluent are taken after the first 10 and 20 minutes. At the end of the 30-minute period, the air cock on the test rig is opened and, if necessary, the oil and water supply valves are closed to stop the flow of influent. A sample is then taken of the separated water effluent as the effluent flow ceases.

(2) *Test No. 2A.* Repeat Test No. 1A in paragraph (b)(1) of this section using an influent containing approximately 25 percent oil and 75 percent water. Percentage is on a by volume basis.

(3) *Test No. 3A.* The separator is fed with 100 percent Test Fluid A until Fluid A is discharged at the oil discharge outlet of the separator at essentially the same rate that oil is being fed to the separator. The separator is then fed with 100 percent Test Fluid A for 5 additional minutes. If any oily mixture is discharged from the separated water outlet on the separator during the test, that observation is recorded.

(4) *Test No. 4A.* The separator is fed with water for 15 minutes. Samples of the separated water effluent are taken at the beginning of the test and after the first 10 minutes.

(5) *Test No. 5A.* The separator is operated automatically for 3 hours. During the test, the separator is continuously fed with an influent varying from water to a mixture of 25 percent Test Fluid A in water and back to water every 15 minutes. The Test Fluid A concentration in the influent is varied in at least five equal increments during each 15-minute period and the time intervals between the incremental changes are equal. During the last hour, the separator must be inclined at an angle of 22.5 ° with the plane of its normal operating position. During the last time increment in which the unit is fed a 25 percent Fluid A mixture, a sample of the separated water effluent is taken. If the separator stops at any time during this test, that observation is recorded.

(c) The following tests shall be conducted using Test Fluid B:

(1) *Test No. 1B:* Repeat Test No. 1A in paragraph (b)(1) of this section using Test Fluid B; and

(2) *Test No. 2B:* Repeat Test No. 2A in paragraph (b)(2) of this section using Test Fluid B.

(d) The following tests shall be conducted using Test Fluid C: *Test No. 1C.* The separator is fed with a mixture composed of 6 percent Test Fluid C and

94 percent water by volume such that the emulsified Test Fluid C content is approximately 3,000 ppm in the test water until a steady flow rate occurs. After the flow rate is steady, the influent containing the 6 percent Test Fluid C solution is fed to the separator operating automatically for 3 hours. Samples of separated water effluent are taken at 50 minutes and 100 minutes. At the end of the 3-hour period, the air cock on the test rig is opened and, if necessary, the oil and water supply valves are closed to stop the flow of influent. A sample is then taken of the separated water effluent as the effluent flow ceases.

21. In § 162.050–25—

a. In paragraph (c), add the words ''(Incorporated by reference, see § 162.050–4)'' immediately after the words ''(dated April 8, 1976)''.

b. In paragraph (g), remove the word and figure ''twenty (20)'' and add, in their place, the figure ''20''.

22. Revise § 162.050–27 to read as follows:

§ 162.050–27 Cargo monitor: Approval tests.

This section contains requirements that apply to cargo monitors.

(a) *Test conditions.* (1) The tests and each step in the tests must be carried out in the order described in this section. Each test must be performed without time delay between steps in the test.

(2) A test rig of the type described in § 162.050–19 must be used in performing each test.

(3) Each mixture used during the tests must be prepared by combining oil supplied from the oil injection pipe of the test rig and water supplied from the mixture tank of the test rig. However, if the flow of oil through the oil injection pipe becomes intermittent, oil and water may be combined in the mixture tank to form the mixture.

(4) A mixture may be circulated through a monitor only once during testing.

(5) Unless otherwise provided in a specific test, the water used in each test must be clean, fresh water.

(6) The oil used in each test, except Test No. 2CM in paragraph (c) of this section, must be Arabian light crude oil.

(7) Each test must be performed at an ambient temperature of between 10 °C and 30 °C.

(8) Unless otherwise provided in a specific test, each test must be performed at the maximum mixture pressure, the maximum flow rate, and the power supply ratings at which the monitor is designed to operate.

(9) The particulate contaminant described in Test No. 5CM in paragraph (f) of this section, if not attapulgite, must be of a type that does not lose more than three percent of its weight after ignition and must be insoluble in a 500 ppm mixture.

(10) In each test the monitor must be operated in accordance with the procedures described in its instructions manual.

(11) Unless otherwise provided in a specific test, the centrifugal pump shown in Figure 162.050–19 in § 162.050–19 must be operated at 1,000 revolutions per minute or more in each test.

(12) Whenever the oil content of a mixture is recorded, a sample of the mixture must also be taken. The oil content of the sample must be measured using the method described in § 162.050–39.

(13) A one-liter sample of each oil to be used in testing must be taken and provided for use in the sample analysis required by § 162.050–39.

(b) *Test No. 1CM Calibration and Zero Test.* The cargo monitor is calibrated and zeroed to manufacturer's instructions. It is then fed with water for 15 minutes and then with mixtures in the following concentrations: 15 ppm, 50 ppm, 100 ppm, and each additional concentration, in increments of 50 ppm up to the highest oil concentration that can be read on the monitor. Each mixture is fed to the monitor in the order listed in Table 162.050–27(c) for 15 minutes. Water is fed to the monitor for a 15-minute period between each mixture. At the end of each 15-minute period, an oil content reading is obtained and recorded.

(c) *Test No. 2CM Response to Different Oil Types Test.* (1) If the cargo monitor is designed for use with crude oils, it is fed with a mixture of water and the first oil listed in Table 162.050–27(c) at the following concentrations: 15 ppm, 100 ppm, and a concentration that is 90 percent of the highest oil concentration in water that can be read on the monitor. Each concentration is fed to the monitor in the order listed until a steady reading occurs and is recorded. After each steady reading is recorded, the monitor is fed with water for 15 minutes. At the end of each 15-minute period of feeding the monitor with water, an oil content reading is again obtained and recorded.

(2) The steps described in paragraph (c)(1) of this section are repeated using each of the other oils listed in Table 162.050–27(c).

TABLE 162.050–27(C).—OIL TYPE AND CHARACTERISTICS

Oil type	Characteristics
Sahara blend crude oil	Density—low. Viscosity—low. Pour point—very low. Producing country—Algeria. General description—mixed base.
Arabian light crude oil	Density—medium. Viscosity—medium. Pour point—low. Producing country—Saudi Arabia. General description—mixed base.
Nigerian medium crude oil	Density—high. Viscosity—medium. Pour point—low. Producing country—Nigeria. General description—naphthenic base.
Bachaquero 17 crude oil	Density—very high. Viscosity—very high. Pour point—low. Producing country—Venezuela. General description—asphaltic base.
Minas crude oil	Density—medium. Viscosity—high.

TABLE 162.050–27(C).—OIL TYPE AND CHARACTERISTICS—Continued

Oil type	Characteristics
Residual fuel oil	Pour point—very high. Producing country—Indonesia. General description—paraffinic base. Bunker C or No. 6 Fuel Oil.

(3) If any oil listed in Table 162.050–27(c) is unavailable, an oil with similar properties may be substituted in testing.

(4) If the monitor is to be used with refined oil products, the steps described in paragraph (c)(1) of this section are performed using each of the following:

(i) Leaded regular grade automotive gasoline;

(ii) Unleaded automotive gasoline;

(iii) Kerosene; and

(iv) Light diesel or No. 2 fuel oil.

(5) If the monitor is to be used with category C and D oil-like noxious liquid substances to meet the requirements of 33 CFR 151.41(b), the tests described in paragraphs (c) and (d) of this section are to be performed using the substances for which approval is sought.

(d) *Test No. 3CM Response Time Test.* (1) The cargo monitor is fed with water, zeroed, and then fed with a 100 ppm mixture. The time at which the monitor first detects oil in the mixture, the times of reading 63 ppm and 90 ppm, and the time of reaching the highest steady reading of oil content are recorded. The oil content of the mixture at the highest steady reading is also recorded.

(2) The metering pump is turned off and the time at which the highest reading starts to decrease, the times of reading 37 ppm and 10 ppm, and the time of returning to the lowest steady oil content reading are recorded. The oil content of the mixture at the lowest steady reading is also recorded.

(3) The time interval between first detecting oil in the mixture and reading 63 ppm, and the time interval between the first decrease in the highest reading and reading 37 ppm, are averaged and recorded as the response time for the monitor.

(e) *Test No. 4CM Oil Fouling and Calibration Shift Test.* (1) The cargo monitor is fed with water, zeroed, and then fed with a mixture containing 10 percent oil for one minute. The following times occurring during this procedure are recorded:

(i) Time at which the monitor first detects oil;

(ii) Time of reading 15 ppm;

(iii) Time of reading 100 ppm;

(iv) Time of exceeding the highest oil concentration that can be read on the monitor;

(v) Time of returning to the highest oil concentration that can be read on the monitor;

(vi) Time of returning to a reading of 100 ppm;

(vii) Time of returning to a reading of 15 ppm; and

(viii) Time of returning to the lowest steady oil content reading.

(2) The oil content of the mixture at the lowest steady reading described in paragraph (e)(1)(viii) of this section is recorded.

(3) The monitor is fed with water, zeroed, and then fed with oil for 1 minute after which the flow of water is resumed. The times described in paragraph (e)(1) of this section are recorded.

(4) The monitor is fed with a 100 ppm mixture until a steady oil content reading is obtained and recorded.

(f) *Test No. 5CM Contaminant Test.* (1) The monitor is fed with a 15 ppm mixture until a steady oil content reading is obtained and recorded.

(2) The cargo monitor is fed with a 15 ppm oil mixture of contaminated water consisting of not less than 270 ppm by weight of the clay mineral attapulgite, or similar contaminant that is stable in both fresh and salt water and 30 ppm by weight of iron oxides. The test contaminant should have a particle size distribution with about 30 percent of 10 microns or less and a maximum particle size of 100 microns. The oil content reading, when steady, is recorded.

(3) Each of the two contaminants will be mixed sequentially in the following manner: the mixing of attapulgite shall be for a period of not less than 15 minutes so that a homogeneous suspension is formed; following, iron oxides will be added for an additional period of not less than 10 minutes. The mixing process should maintain the contaminants in suspension throughout the test period.

(4) The test in paragraph (f)(2) of this section is repeated for 100 and 300 ppm oil mixtures in contaminated water.

(g) *Test No. 6CM Air Entrainment Test.* (1) The cargo monitor is fed with a 15 ppm mixture until a steady oil content reading is obtained and recorded.

(2) Air is injected into the cargo monitor test rig before the sample pump or, in the absence of such pump, immediately before any conditioning unit used to prepare the mixture for measurement. Injection must be by needle having an orifice dimension not exceeding 0.5 mm in diameter arranged in line with the sample flow. The quantity of air injected must be one percent of the designated flow rate of the sample pump or conditioning unit at the point of injection.

(3) Air must be delivered to the system by direct injection or pump via a suitable measuring device designed to permit a constant controllable flow rate within ±10 percent of the required rate of injection for an uninterrupted effective test period of not less than 15 minutes.

(4) The oil content reading, when steady, is recorded.

(h) *Test No. 7CM Oil Particle Size—Centrifugal Pump Test.* (1) The cargo monitor is fed with a 100 ppm mixture until a steady oil content reading is obtained and recorded.

(2) The monitor is fed with a 100 ppm mixture that has first passed through the centrifugal pump of the test rig. The pump is run at one-fourth of its design speed. The oil content reading, when steady, is recorded.

(3) The steps described in paragraph (h)(2) of this section are repeated with the pump running at one-half of its design speed and then repeated at its design speed.

(i) *Test No. 8CM Temperature Test.* (1) The steps described in paragraph (h)(1) of this section are repeated.

(2) The temperature of the mixture is adjusted to 10 °C and the flow continued until a steady oil content reading is obtained and recorded.

(3) The steps described in paragraph (i)(2) of this section are repeated with the temperature of the mixture at 65 °C or the highest mixture temperature at which the cargo monitor is designed to operate, whichever is lower.

(j) *Test No. 9CM Sample Pressure or Flow Test.* (1) The steps described in paragraph (h)(1) of this section are repeated.

(2) If the monitor has a positive displacement mixture pump, the mixture pressure is lowered to one-half of the monitor's maximum design pressure. If the monitor has a centrifugal

mixture pump, or is not equipped with a mixture pump, the mixture flow rate is reduced to one-half of the monitor's design flow rate. The reduced flow rate or mixture pressure is maintained until a steady oil content reading is obtained and recorded.

(3) If the monitor has a positive displacement mixture pump, the mixture pressure is increased to twice the monitor's design pressure. If the monitor has a centrifugal mixture pump or does not have a mixture pump, the mixture flow rate is increased to twice the monitor's maximum design flow rate. The increased flow rate or mixture pressure is maintained until a steady oil content reading is obtained and recorded.

(k) *Test No. 10CM Shut-off Test.* (1) The steps described in paragraph (h)(1) of this section are repeated.

(2) The water and metering pumps on the test rig are stopped for 8 hours after which the steps described in paragraph (h)(1) of this section are repeated.

(l) *Test No. 11CM Supply Voltage Variation Test.* (1) The supply voltage to the cargo monitor is increased to 110 percent of its design supply voltage. The monitor is then fed a 100 ppm mixture for one hour. At the end of the 1-hour period, an oil content reading is obtained and recorded.

(2) The steps described in paragraph (l)(1) of this section are repeated with the supply voltage to the monitor lowered to 90 percent of its design supply voltage.

(3) Upon completing the steps described in paragraph (l)(2) of this section, the supply voltage to the monitor is returned to the design rating.

(4) The steps described in paragraphs (l)(1) through (l)(3) of this section are repeated varying each power supply to the monitor in the manner prescribed in those steps for supply voltage.

(m) *Test No. 12CM Calibration and Zero Drift Test.* (1) The monitor is calibrated and zeroed.

(2) The steps described in paragraph (h)(1) of this section are repeated.

(3) A 100 ppm mixture is fed to the monitor for 8 hours. At the end of the 8-hour period, an oil content reading is obtained and recorded.

(4) The monitor is fed with water until a steady oil content reading is obtained and recorded.

(n) *Test No. 13CM Shut-down and Restart Test.* (1) All power to the monitor is shut off for one week. After 1 week the monitor is started, zeroed, and calibrated.

(2) The monitor is fed with a 100 ppm mixture for 1 hour. An oil content reading is then obtained and recorded.

(3) The monitor is fed with water for 1 hour. An oil content reading is then obtained and recorded.

(4) The steps described in paragraphs (n)(2) and (n)(3) of this section are repeated three additional times. During the last hour in which the monitor is fed with a 100 ppm mixture, the monitor is inclined at an angle of 22.5 ° with the plane of its normal operating position.

§ 162.050–29 [Removed]

23. Remove § 162.050–29.

§ 162.050–31 [Removed]

24. Remove § 162.050–31.

25. In § 162.050–33, in paragraph (b), remove the paragraph designator ''(g)'' and add, in its place, the paragraph designator ''(f)''; in paragraph (c)(1), remove the abbreviation ''p.p.m'', and add, in its place, the letters ''ppm''; and add new paragraphs (d), (e), (f), (g), and (h) to read as follows:

§ 162.050–33 Bilge alarm: Design specification.

* * * * *

(d) Each bilge alarm must have a ppm display. Emulsions and/or the type of oil must not affect the ppm display. Calibrating the bilge alarm must not be necessary once installed on board the vessel, however, on board testing in accordance with the manufacturer's instructions is permitted. The accuracy of the readings must at all times remain within the limits described in paragraph (c)(1) of this section.

(e) Each bilge alarm must be designed so that it displays each change in oil content of the mixture it is measuring within 5 seconds after the change occurs.

(f) Access to the bilge alarm beyond checking instrument drift must be limited; repeatability of the instrument reading and the ability to re-zero the instrument must require the breaking of a seal.

(g) Each bilge alarm must activate its alarm whenever clean water is used for cleaning or zeroing purposes.

(h) The bilge alarm must record date, time, alarm status, and operating status of the 15 ppm bilge separator. The recording device must also store data for at least 18 months and be able to display or print a protocol. In the event the 15 ppm bilge alarm is replaced, means must be provided to ensure the data recorded remains available on board for 18 months.

26. Revise § 162.050–35 to read as follows:

§ 162.050–35 Bilge alarm: Approval tests.

This section contains requirements that apply to bilge alarms.

(a) *Test conditions.* (1) Each test must be conducted under the conditions prescribed for cargo monitors in §§ 162.050–27(a)(1) through (a)(5), (a)(7), (a)(8), (a)(10), (a)(11), and (a)(13).

(2) The tests in this section shall be performed using test fluids described in § 162.050–20.

(3) The oil content of each sample must be measured using the method described in § 162.050–39.

(b) *Test No. 1A Calibration and Zero Test.* (1) The bilge alarm is calibrated and zeroed to manufacturer's instructions.

(2) It is then fed with water for 15 minutes and then with a mixture of Test Fluid A and water in the following concentrations: 0 ppm, 15 ppm, and the highest oil concentration that can be read on the monitor. A sample of the mixture causing actuation of the alarm is taken. The alarm is then fed with water for 15 minutes.

(3) Repeat steps in paragraphs (b)(1) and (2) of this section first using Test Fluid B and then again with Test Fluid C. Collect samples as required in the test for each run of Test Fluid B and Test Fluid C.

(4) If the bilge alarm must be calibrated and re-zeroed between test fluids, this shall be noted in the test report.

(c) *Test No. 2A Contaminant Test.* (1) The bilge alarm is fed for 5 minutes with a 10 ppm mixture of Test Fluid B and water. At the end of the 5-minute period an oil content reading is obtained and recorded.

(2) The bilge alarm is then fed for 5 minutes with a 10 ppm mixture of Test Fluid B and water contaminated with a 10 ppm concentration of iron oxide. Any change in the bilge alarm reading during the 5 minutes is recorded.

(3) Repeat steps in paragraphs (c)(1) and (2) of this section using iron oxide concentrations of 50 ppm and 100 ppm.

(4) The bilge alarm is then fed for 5 minutes with a 10 ppm mixture of Test Fluid B and water. At the end of the 5-minute period an oil content reading is obtained and recorded.

(5) The bilge alarm is fed for 5 minutes with a 10 ppm mixture of Test Fluid B and fresh water with 6 percent sodium chloride. Any change in the bilge alarm reading is recorded.

(d) *Test No. 3A Sample Pressure or Flow Test.* (1) The bilge alarm is fed with a mixture of Test Fluid B and water and the test fluid content of the mixture is increased until the bilge alarm actuates. The ppm display is recorded and a sample of the mixture causing actuation of the alarm is taken.

(2) If the alarm has a positive displacement mixture pump, the

mixture pressure is reduced to one-half of the alarm's maximum design pressure. If the alarm has a centrifugal mixture pump or is not equipped with a mixture pump, the mixture flow rate is reduced to one-half of the alarm's maximum design flow rate. After reduction of pressure or flow rate, the oil content in the mixture is increased until the alarm actuates. The ppm display is recorded and a sample of the mixture causing actuation of the alarm is taken.

(3) If the alarm has a positive displacement mixture pump, the influent pressure is increased to twice the alarm's minimum design pressure. If the alarm has a centrifugal mixture pump or if the alarm is not equipped with a mixture pump, the influent flow rate is increased to twice the alarm's maximum design flow rate. After increasing the pressure or flow rate, the oil content in the mixture is increased until the alarm actuates. The ppm display is recorded and a sample of the mixture causing actuation is taken.

(e) *Test No. 4A Shut-off Test.* (1) The steps described in paragraph (d)(1) of this section are repeated.

(2) The metering and water pumps of the test rig are stopped for 8 hours with the bilge alarm left turned on with no other changes made.

(3) The metering and water pumps are started and the Test Fluid B content of the mixture is increased until the bilge alarm actuates. A sample of the mixture causing actuation is taken. The bilge alarm ppm display readings before and after the 8-hour period will be recorded.

(f) *Test No. 5A Supply Voltage Variation Test.* (1) The supply voltage to the bilge alarm is raised to 110 percent of its design supply voltage. The bilge alarm is fed with a mixture of Test Fluid B and water and the test fluid content of the mixture is increased until the bilge alarm actuates. The ppm display is recorded and a sample of the mixture causing actuation is taken.

(2) The supply voltage to the alarm is lowered to 90 percent of its design supply voltage. The bilge alarm is fed with a mixture of Test Fluid B and water and the test fluid content of the mixture is increased until the bilge alarm actuates. The ppm display is recorded and a sample of the mixture causing actuation is taken.

(3) Upon completion of the steps described in paragraph (f)(2) of this section, the supply voltage to the alarm is returned to its design value.

(4) The steps described in paragraphs (f)(1) through (f)(3) of this section are repeated varying each other power supply to the alarm in the manner prescribed in those steps for supply voltage.

(g) *Test No. 6A Calibration and Zero Test.* (1) The steps described in paragraph (b)(1) of this section are repeated and then the steps in paragraph (d)(1) of this section are repeated.

(2) The bilge alarm is fed with a 15 ppm mixture of Test Fluid B and water for eight hours and any calibration drift is recorded. Samples of the mixture must be taken at the beginning of the test and at 2-hour intervals until the completion of the 8-hour period.

(3) The steps in paragraph (g)(2) of this section are repeated using clean, oil-free water only. Any zero drift is recorded.

(h) *Test No. 7A Response Time Test.* (1) The bilge alarm is fed with a 40 ppm mixture of Test Fluid B and water until the bilge alarm actuates. The time of turning on the metering pump of the test rig and the time of alarm actuation are recorded. The flow rate on the flow meter of the test rig is also recorded.

(i) *Test No. 8A Shut Down and Restart Test.* (1) All power to the bilge alarm is shut off for 1 week. After 1 week the alarm is then started, zeroed, and calibrated.

(2) The steps described in paragraph (d)(1) of this section are repeated. Water is then fed to the monitor for 1 hour.

(3) The steps described in paragraph (i)(2) of this section are repeated seven additional times. During the last hour, the alarm must be inclined at an angle of 22.5 ° with the plane of its normal operating position.

27. In § 162.050–37, in paragraph (b), remove the figure ''4'' and add, in its place, the word ''2''; redesignate paragraphs (b)(1) through (3) as paragraphs (b)(1)(i) through (iii); redesignate paragraph (b) introductory text as (b)(1) and designate the undesignated paragraph as (b)(2); and add paragraph (c) to read as follows:

§ 162.050–37 Vibration test.

* * * * *

(c) After completion of the test described in paragraph (b) of this section, the test must be repeated and any significant change in the vibration pattern will be noted in the test report.

28. Revise § 162.050–39 to read as follows:

§ 162.050–39 Measurement of oil content.

(a) The collection and testing of all samples of oil in water from the required test will be accomplished in accordance with ISO 9377–2 (2000), Water Quality—Determination of hydrocarbon oil index—Part 2: Method Using solvent extraction and Gas Chromatography (Incorporated by reference, see § 162.050–4).

(b) Testing facilities may continue to use the infrared spectrophotometer assay in lieu of ISO 9377–2, so long as supplies of reagents necessary for the testing are available.

Dated: October 24, 2005.

T.H. Gilmour,

Rear Admiral, U.S. Coast Guard, Assistant Commandant for Marine Safety, Security and Environmental Protection.

[FR Doc. 05–21573 Filed 11–2–05; 8:45 am]

BILLING CODE 4910–15–P