Federal Register

Tuesday,
October 21, 2008

Part III

Department of Transportation

National Highway Traffic Safety Administration

49 CFR Part 571

Federal Motor Vehicle Safety Standards; Seating Systems, Occupant Crash Protection, Seat Belt Assembly Anchorages, School Bus Passenger Seating and Crash Protection; Final Rule

DEPARTMENT OF TRANSPORTATION

National Highway Traffic Safety Administration

49 CFR Part 571

[Docket No. NHTSA–2008–0163]

RIN 2127–AK09

Federal Motor Vehicle Safety Standards; Seating Systems, Occupant Crash Protection, Seat Belt Assembly Anchorages, School Bus Passenger Seating and Crash Protection

AGENCY: National Highway Traffic Safety Administration (NHTSA), Department of Transportation (DOT).

ACTION: Final rule.

SUMMARY: This final rule upgrades the school bus passenger crash protection requirements of Federal Motor Vehicle Safety Standard (FMVSS) No. 222. This final rule requires new school buses of 4,536 kilograms (10,000 pounds) or less gross vehicle weight rating (GVWR) (''small school buses'') to have lap/shoulder belts in lieu of the lap belts currently required. This final rule also sets performance standards for seat belts voluntarily installed on school buses with a GVWR greater than 4,536 kilograms (10,000 pounds) (''large school buses''). Each State or local jurisdiction may decide whether to install seat belts on these large school buses. Other changes to school bus safety requirements include raising the height of seat backs from 508 mm (20 inches) to 610 mm (24 inches) on all new school buses and requiring a self-latching mechanism on seat bottom cushions that are designed to flip up or be removable without tools.

DATES: The effective date of this final rule is April 20, 2009. The requirement for lap/shoulder belts on small school buses applies to small school buses manufactured on or after October 21, 2011. Likewise, the requirement that voluntarily-installed seat belts in large school buses must meet the performance and other requirements specified by this final rule applies to large school buses manufactured on or after October 21, 2011. The requirement for the 24-inch seat backs and the self-latching seat bottom cushions apply to school buses manufactured on or after October 21, 2009.

Petitions for reconsideration: Petitions for reconsideration of this final rule must be received not later than December 5, 2008.

ADDRESSES: Petitions for reconsideration of this final rule must refer to the docket and notice number set forth above and be submitted to the Administrator, National Highway Traffic Safety Administration, 1200 New Jersey Avenue, SE., Washington, DC 20590.

FOR FURTHER INFORMATION CONTACT: For non-legal issues, Mr. Charles Hott, Office of Vehicle Safety Standards (telephone: 202–366–0247) (fax: 202–366–4921), NVS–113. For legal issues, Ms. Dorothy Nakama, Office of the Chief Counsel (telephone: 202–366–2992) (fax: 202–366–3820), NCC–112. These officials can be reached at the National Highway Traffic Safety Administration, 1200 New Jersey Avenue, SE., Washington, DC 20590.

SUPPLEMENTARY INFORMATION:

Table of Contents

I. Introduction
II. Background
III. Studies
IV. Guiding Principles
a. Comments in Favor of a Federal Requirement for Belts on Large School Buses
b. Other Issues Concerning Belts on Large School Buses
c. Comments in Favor of a Federal Ban of Lap Belts in Large School Buses
d. Comments on Use of Section 402 Highway Safety Grant Funds
1. Use of Existing Federal Grant Funds to Purchase Seat Belts
2. Additional Federal Grant Funds to Purchase Seat Belts
V. Overview of Upgrades to Occupant Crash Protection Standards
a. Summary of the NPRM Proposed Upgrades
b. Overview of Comments
c. How This Final Rule Differs From the NPRM
d. Post-NPRM Testing
e. Organization of Discussion
VI. Upgrades for All School Buses
a. Seat Back Height
b. Seat Cushion Latches
VII. Upgrades for Small School Buses
a. Requiring Lap/Shoulder Belts
b. Raising the Weight Limit for Small School Buses
c. FMVSS No. 207, Seating Systems
VIII. Upgrades for Large School Buses Requiring Voluntarily Installed Belts to Meet Performance Requirements
IX. Performance and Other Requirements for Vehicle Belt Systems
a. Minimum Seat Width Requirements and Calculating W and Y
1. Flex-Seats
2. Using W and Rounding Up
3. Definitions
b. FMVSS No. 210, Seat Belt Anchorages
1. Height of the Torso Belt Anchorage
2. Anchorage Adjustability
3. Clarifications of Torso Anchorage Location
4. Integration of the Seat Belt Anchorages Into the Seat Structure
5. Minimum Lateral Anchorage Separation
6. Anchorage Strength
c. Quasi-Static Test for Lap/Shoulder Belts on All School Buses
1. Background
2. Comments and Agency Responses
d. Belt Length
X. Lead Time
XI. Rulemaking Analyses and Notices

I. Introduction

This final rule upgrades the school bus occupant protection requirements of the Federal motor vehicle safety standards, primarily by amendments to FMVSS No. 222, ''School bus passenger seating and crash protection'' (49 CFR 571.222), and also by amendments to FMVSS Nos. 207, 208, and 210 relating to the strength of the seating system and seat belt anchorages. The notice of proposed rulemaking (NPRM) preceding this final rule was published on November 21, 2007 (72 FR 65509; Docket No. NHTSA–2007–0014). This final rule also provides information to state and local jurisdictions for them to consider when deciding whether they should order seat belts on large school buses (school buses with a GVWR greater than 4,536 kilograms (kg) (10,000 pounds (lb)), and responds to comments on the agency's discussion in the NPRM of recommended ''best practices'' concerning the belts on the large buses.[1]

This final rule's most significant changes to FMVSS No. 222 involve:

- Requiring small school buses to have a Type 2 seat belt assembly (a combination of pelvic and upper torso restraints (see FMVSS No. 209, S3), referred to in this document as a ''lap/shoulder belt'') at each passenger seating position (these buses are currently required to have lap belts);
- Increasing the minimum seat back height requirement from 508 millimeters (mm) (20 inches) from the seating reference point (SgRP) to 610 mm (24 inches) for all school buses;
- Incorporating test procedures into the standard to test lap/shoulder belts in small school buses and voluntarily-installed lap and lap/shoulder belts in large school buses to ensure both the strength of the anchorages and the compatibility of the seat with compartmentalization; and

[1] ''School bus'' is defined in 49 CFR 571.3 as a bus that is sold, or introduced in interstate commerce, for purposes that include carrying students to and from school or related events, but does not include a bus designed and sold for operation as a common carrier in urban transportation. A ''bus'' is a motor vehicle, except a trailer, designed for carrying more than 10 persons. In this NPRM, when we refer to ''large'' school buses, we refer to those school buses with GVWRs of more than 4,536 kg (10,000 lb). These large school buses may transport as many as 90 students. ''Small'' school buses are school buses with a GVWR of 4,536 kg (10,000 lb) or less. Generally, these small school buses seat 15 persons or fewer, or have one or two wheelchair seating positions.

• Requiring all school buses with seat bottom cushions that are designed to flip up or be removable, typically for easy cleaning, to have a self-latching mechanism.

The first three upgrades are based on the findings of NHTSA's school bus research program, discussed in detail later in this preamble, which the agency conducted in response to the Transportation Equity Act for the 21st Century (TEA–21).[2] Requiring small school buses to have lap/shoulder belts for all passengers and raising the seat back height on all school buses to 610 mm (24 inches) makes the highly protective interior of the school bus even safer. Further, as new designs of lap/shoulder belts intended for large school buses are emerging in the marketplace, the third initiative will require lap/shoulder belts to be complementary with compartmentalization, ensuring that the high level of passenger crash protection is enhanced and not degraded by any seat belt system.

This rulemaking engaged the agency and public in a new dialogue on the merits of seat belts on large school buses. It also provided a forum for a fresh look at divergent positions on the belt issue and an opportunity to explore the implications of the school bus research results, the innovation of new technologies, and the realities of current pupil transportation needs. About 127 individuals and organizations commented on the NPRM, with many taking the position that lap/shoulder belts should be required on large school buses and with many opposed to that idea. Some individuals further sought to have the agency prohibit the installation of lap belts on large school buses. Many commenters focused on the emerging seat belt technology that would enable school bus manufacturers to install lap/shoulder belts on large school buses without reducing passenger capacity, and asked NHTSA to ensure that the performance requirements under consideration would not prohibit that technology. Others did not believe any type of belt system should be encouraged for large school buses.

After consideration of the comments, we make final most of the technical changes to the FMVSSs proposed in the NPRM, but have adjusted test procedures and some performance requirements to accommodate the emerging seating design technologies. We have also listened to each of the comments in support of and in opposition to the various issues involved in this rulemaking and have adjusted some of our views, while affirming others.

However, this final rule cannot and does not definitively conclude the debate as to whether a State or local jurisdiction should require seat belts on its large school buses. Under the National Traffic and Motor Vehicle Safety Act (''Safety Act'') (49 U.S.C. 30101 *et seq.*) the agency is to prescribe motor vehicle safety standards that are practicable, meet the need for motor vehicle safety, and that are stated in objective terms. Under the Safety Act, ''motor vehicle safety'' means the performance of a motor vehicle or motor vehicle equipment in a way that protects the public against unreasonable risk of accidents occurring because of the design, construction, or performance of a motor vehicle, and against unreasonable risk of death or injury in an accident * * *.'' 49 U.S.C. 30102(a)(8). After considering all available information, including the comments to the NPRM, we cannot conclude that a requirement for seat belts on large school buses will protect against an unreasonable risk of accidents or an unreasonable risk of death or injury in an accident. That is, based on available information, a science-based, data-driven determination that there should be a Federal requirement for the belts cannot be supported at this time. Whether the same conclusion can be made by a State or local jurisdiction is a matter for local decision-makers and we encourage them to make the decisions most appropriate for their individual needs to most safely transport their students to and from school.

This final rule provides the most up-to-date information known to the agency on seat belts on large school buses. It discusses principles that the agency has weighed about belts on large buses and attempts to clear up some misunderstanding expressed in some of the comments about the benefits of belts in school bus side impacts and rollover crashes. It affirms that States should have the choice of ordering seat belts on their large school buses since the belts could enhance the already very safe passenger protection afforded by large school buses, and makes sure that these voluntarily-installed belts will not degrade compartmentalization.

II. Background

The Motor Vehicle and Schoolbus Safety Amendments of 1974 directed NHTSA to issue motor vehicle safety standards applicable to school buses and school bus equipment. In response to this legislation, NHTSA revised several of its safety standards to improve existing requirements for school buses, extended ones for other vehicle classes to those buses, and issued new safety standards exclusively for school buses. FMVSS No. 222, one of a set of new standards for school buses, improves protection to school bus passengers during crashes and sudden driving maneuvers.

Effective since 1977, FMVSS No. 222 contains occupant protection requirements for school bus seating positions and restraining barriers. Its requirements for school buses with GVWR's of 4,536 kg (10,000 pounds) or less (small school buses) differ from those for school buses with GVWR's greater than 4,536 kg (10,000 pounds) (large school buses), because the ''crash pulse'' or deceleration experienced by the small school buses is typically more severe than that of the large buses in similar collisions. For the small school buses, the standard includes requirements that all seating positions must be equipped with lap (Type 1) or lap/shoulder (Type 2) seat belt assemblies and anchorages for passengers.[3] NHTSA decided that seat belts were necessary on small school buses to provide adequate crash protection for the occupants. For the large school buses, FMVSS No. 222 relies on requirements for ''compartmentalization'' to provide passenger crash protection. Investigations of school bus crashes prior to issuance of FMVSS No. 222 found the school bus seat was a significant factor in causing injury. NHTSA found that the seat failed the passengers in three principal respects: By being too weak, too low, and too hostile (39 FR 27584; July 30, 1974). In response to this finding, NHTSA developed a set of requirements which comprise the ''compartmentalization'' approach.

Compartmentalization ensures that passengers are cushioned and contained by the seats in the event of a school bus crash by requiring school bus seats to be positioned in a manner that provides a compact, protected area surrounding each seat. If a seat is not compartmentalized by a seat back in front of it, compartmentalization must be provided by a padded and protective restraining barrier. The seats and restraining barriers must be strong enough to maintain their integrity in a crash, yet flexible enough to be capable

[2] The fourth initiative, for self-latching mechanisms, responds to an NTSB recommendation to NHTSA (H–84–75).

[3] Lap/shoulder belts and appropriate anchorages for the driver and front passenger (if provided) seating position, lap belts or lap/shoulder and appropriate anchorages for all other passenger seating positions.

of deflecting in a manner which absorbs the energy of the occupant. They must meet specified height requirements and be constructed, by use of substantial padding or other means, so that they provide protection when they are impacted by the head and legs of a passenger. Compartmentalization minimizes the hostility of the crash environment and limits the range of movement of an occupant. The compartmentalization approach ensures that high levels of crash protection are provided to each passenger independent of any action on the part of the occupant.

NHTSA has considered the question of whether seat belts should be required on large school buses from the inception of compartmentalization and the school bus safety standards. NHTSA has been repeatedly asked to require belts on buses, has repeatedly reanalyzed the issue, and has repeatedly concluded that compartmentalization provides a high level of safety protection that obviates the safety need for a Federal requirement necessitating the installation of seat belts. Further, the agency has been acutely aware that a decision on requiring seat belts in large school buses cannot ignore the implications of such a requirement on pupil transportation costs. The agency has been attentive to the fact that, as a result of requiring belts on large school buses, school bus purchasers would have to buy belt-equipped vehicles regardless of whether seat belts would be appropriate for their needs. Prior to today's rulemaking, NHTSA has concluded that those costs should not be imposed on all purchasers of school buses when large school buses are currently extremely safe. In the area of school transportation especially, where a number of needs are competing for limited funds, persons responsible for school transportation might want to consider other alternative investments to improve their pupil transportation programs which can be more effective at reducing fatalities and injuries than seat belts on large school buses, such as by acquiring additional new school buses to add to their fleet, or implementing improved pupil pedestrian and driver education programs. Since each of these efforts competes for limited funds, the agency has maintained that those administrators should decide how their funds should be allocated.

Nonetheless, throughout the past 30 years that compartmentalization and the school bus safety standards have been in effect, the agency has openly and continuously considered the merits of a seat belt requirement for large school buses.[4] The issue has been closely analyzed by other parties as well, such as the National Transportation Safety Board, and the National Academy of Sciences. Various reports have been issued, the most significant of which are described below.

III. Studies

• *National Transportation Safety Board, 1987*

In 1987, the National Transportation Safety Board (NTSB) reported on a study of forty-three post-standard school bus crashes investigated by the Safety Board. NTSB concluded that most fatalities and injuries in school bus crashes occurred because the occupant seating positions were directly in line with the crash forces, and that seat belts would not have prevented those injuries and fatalities. (NTSB/SS–87/01, Safety Study, Crashworthiness of Large Post-standard School Buses, March 1987, National Transportation Safety Board.)

• *National Academy of Sciences, 1989*

A 1989 National Academy of Sciences (NAS) study concluded that the overall potential benefits of requiring seat belts on large school buses were insufficient to justify a Federal mandate for installation. The NAS also stated that funds used to purchase and maintain seat belts might be better spent on other school bus safety programs with the potential to save more lives and reduce more injuries. (Special Report 222, Improving School Bus Safety, National Academy of Sciences, Transportation Research Board, Washington, DC, 1989)

• *National Transportation Safety Board, 1999*

In 1999, the NTSB reported on six school bus crashes it investigated in which passenger fatalities or serious injuries occurred away from the area of vehicle impact. The NTSB found compartmentalization to be an effective means of protecting passengers in school bus crashes. However, because many of those passengers injured in the six crashes were believed to have been thrown from their compartments, NTSB believed other means of occupant protection should be examined. (NTSB/SIR–99/04, Highway Safety Report, Bus Crashworthiness Issues, September 1999, National Transportation Safety Board)

• *National Academy of Sciences, 2002*

In 2002, the NAS published a study that analyzed the safety of various transportation modes used by school children to get to and from school and school-related activities. The report concluded that each year there are approximately 815 school transportation fatal injuries per year. Two percent were school bus-related, compared to 22 percent due to walking/bicycling, and 75 percent from passenger car crashes, especially those with teen drivers. The report stated that changes in any one characteristic of school travel can lead to dramatic changes in the overall risk to the student population. Thus, the NAS concluded, it is important for school transportation decisions to take into account all potential aspects of changes to requirements to school transportation. (Special Report 269, ''The Relative Risks of School Travel: A National Perspective and Guidance for Local Community Risk Assessment,'' Transportation Research Board of the National Academies, 2002)

• *National Highway Traffic Safety Administration, 2002*

In 2002, NHTSA studied school bus safety (2002 School Bus Safety Study). Based on this research, the agency issued a Congressional Report that detailed occupant safety on school buses and analyzed options for improving occupant safety. (''Report to Congress, School Bus Safety: Crashworthiness Research, April 2002,'' *http://www-nrd.nhtsa.dot.gov/departments/nrd-11/SchoolBus/SBReportFINAL.pdf*) (hereinafter ''2002 Report to Congress''). The agency provided additional analysis of these data in a Technical Analysis supporting the NPRM (''2007 Technical Analysis'').[5]

TEA–21 directed NHTSA to study and assess school bus occupant safety and analyze options for improvement. In response, the agency developed a research program to determine the real-world effectiveness of FMVSS No. 222 requirements for school bus passenger crash protection, evaluate alternative passenger crash protection systems in controlled laboratory tests, and provide findings to support rulemaking activities to upgrade the passenger crash protection for school bus passengers.

The research program consisted of NHTSA first conducting a full-scale school bus crash test to determine a representative crash pulse. The crash

[4] Through the years, NHTSA has been petitioned about seat belts on large school buses. (See, e.g., denials of petitions to require seat belt anchorages, 41 FR 28506 (July 12, 1976), 48 FR 47032 (October 17, 1983); response to petition for rulemaking to prohibit the installation of lap belts on large school buses, 71 FR 40057 (July 14, 2006).)

[5] ''NHTSA Technical Analysis to Support Upgrading the Passenger Crash Protection in School Buses (September 2007),'' Docket No. NHTSA–2007–0014.

test was conducted by frontally impacting a conventional style school bus (Type C) into a rigid barrier at 30 mph (48.3 km/h). The impact speed was chosen to ensure that sufficient energy would be imparted to the occupants in order to evaluate the protective capability of compartmentalization, plus provide a level at which other methods for occupant injury mitigation could be evaluated during sled testing. A 30 mph (48 km/h) impact into the rigid barrier is also equivalent to two vehicles of similar size impacting at a closing speed of approximately 60 mph (96 km/h), which represents a severe frontal crash.

In the crash test, we used Hybrid III 50th percentile adult male dummies (representing adult and large teenage occupants), 5th percentile adult female (representing an average 12-year-old (12YO) occupant), and a 6-year-old child dummy (representing an average 6 year-old (6YO) occupant). The dummies were seated so that they were as upright as possible and as rearmost on the seat cushion as possible. The agency evaluated the risk of head injury recorded by the dummies (Head Injury Criterion (HIC15)), as well as the risk of chest (chest G's) and neck injury (Nij),[6] as specified in FMVSS No. 208 ''Occupant crash protection.''

NHTSA then ran frontal crash test simulations at the agency's Vehicle Research and Test Center (VRTC), using a test sled to evaluate passenger protection systems. Twenty-five sled tests using 96 test dummies of various sizes utilizing different restraint strategies were conducted that replicated the acceleration time history of the school bus full-scale frontal impact test. The goal of the laboratory tests was to analyze the dummy injury measures to gain a better understanding of the effectiveness of the occupant crash protection countermeasures. In addition to injury measures, dummy kinematics and interaction with restraints (i.e., seat backs and seat belts, as well as each other) were also analyzed to provide a fuller understanding of the important factors contributing to the type, mechanism, and potential severity of any resulting injury.

NHTSA studied three different restraint strategies: (a) Compartmentalization; (b) lap belt (with compartmentalization); and (c) lap/shoulder belt (with compartmentalization).

Within the context of these restraint strategies, various boundary conditions were evaluated: (a) Seat spacing—483 mm (19 inches), 559 mm (22 inches) and 610 mm (24 inches); (b) seat back height—nominally 508 mm (20 inches) and 610 mm (24 inches); and (c) fore/aft seat occupant loading.[7] Ten dummies were tested with misused or out-of-position (OOP) lap or shoulder restraints. The restraints were misused by placing the lap belt too high up on the waist, placing the lap/shoulder belt placed behind the dummy's back, or placing the lap/shoulder belt under the dummy's arm.

The agency found the following with regard to compartmentalization:

- Head injury measures were low for all dummy sizes, except when override[8] occurred.
- High head injury values (greater than the IARV) or dummy-to-dummy contacts beyond the biofidelic range of the test dummy were produced when the large male dummy overrode the seat in front of it, while the high-back seats lessened the override.
- Low chest injury measures were observed for all dummy sizes.
- Two 50th percentile male dummies in a seat were not well compartmentalized, as evidenced by head and neck injury measures being greater than the IARVs, due to large forward seat back deformation.
- Based on dummy motion and interaction with each other, compartmentalization was sensitive to seat back height for the 50th percentile male dummy.
- Compartmentalization of 6YO and 5th percentile female dummies did not appear to be sensitive to rear loading conditions.
- Compartmentalization of the 50th percentile male dummy did not appear to be sensitive to seat spacing for the 50th percentile male dummy.
- The average neck injury values for the 6YO and 5th percentile female dummy tests were above the IARV.

The agency found the following with regard to lap belts:

- Head and chest injury values were low for all dummy sizes.
- The average neck injury value was greater than the IARV for all test dummies, and was 70 percent above for the 5th percentile female dummy.
- Neck injury values increased for the 5th percentile female dummy when the seat spacing was increased from 483 mm (19 inches) to 559 mm (22 inches).

The agency found the following with regard to properly worn lap/shoulder belts:

- Head, chest and neck injury values were low for all size dummies and below those seen in the compartmentalization and lap belt results.
- Average head injury values were, at most, about half those seen in the compartmentalization and lap belt results.
- Neck injury values increased with application of rear loading for the 6YO and 5th percentile female dummies.
- Lap/shoulder belt systems would require approximately 380 mm (15 inches) of seat width per passenger seating position. The standard school bus bench seat is 990 mm (39 inches) wide, and is considered a three-passenger seat. If the width of the seat bench were increased to 1,143 mm (45 inches) for both seats on the left and right side of the school bus, the aisle width would be reduced to an unacceptable level.

NHTSA found that, for improperly worn lap/shoulder belts:

- Placing the shoulder belt behind the dummy's back resulted in dummy motion and average dummy injury values similar to lap belt restraint.
- Placing the shoulder belt under the dummy's arm provided more restraint on dummy torso motions than when the belt is placed behind the back. Average dummy injury values for the 6YO were about the same as seen with lap/shoulder belts and 5th percentile female dummy injury values were between those seen in lap/shoulder belts and lap belts.

It is important to note that these sled tests simulated only a severe, 30 mph (48.3 km/h) frontal crash condition. Therefore, the agency was not able to conclude that the higher neck injury measures associated with the lap belt in these tests would translate to an overall greater safety risk. Lap belts could retain the occupants in side impact, rollover, or lower speed frontal crashes, which occur with a greater frequency.

[6] The injury assessment reference values (IARVs) for these measurements are the thresholds used to assess new motor vehicles with regard to frontal occupant protection as specified in FMVSS No. 208. HIC15 is a measure of the risk of head injury, Chest G is a measure of chest injury risk, and Nij is a measure of neck injury risk. For HIC15, a score of 700 is equivalent to a 30 percent risk of a serious head injury (skull fracture and concussion onset). In a similar fashion, Chest G of 60 equates to a 60 percent risk of a serious chest injury and Nij of 1 equates to a 22 percent risk of a serious neck injury. For all these measurements, higher scores indicate a higher likelihood of risk. For example, a Nij of 2 equates to a 67 percent risk of serious neck injury while a Nij of 4 equates to a 99 percent risk. More information regarding these injury measures can be found at NHTSA's Web site (*http://www-nrd.nhtsa.dot.gov/pdf/nrd-11/airbags/rev_criteria.pdf*).

[7] Unbelted occupants in the aft seat will affect the kinematics of belted occupants in the fore seat due to seat back deformation. Similarly, belted occupant loading of the fore seat back through the torso belt will affect the compartmentalization for unbelted occupants in the aft seat.

[8] Override means an occupant's head or torso translates forward beyond the forward seat back providing compartmentalization.

IV. Guiding Principles

School buses are one of the safest forms of transportation in the U.S. Every year, approximately 474,000 public school buses, transporting 25.1 million children to and from school and school-related activities,[9] travel an estimated 4.8 billion route miles.[10] Over the 11 years ending in 2005, there was an annual average of 26 school transportation related fatalities (11 school bus occupants (including drivers and passengers) and 15 pedestrians).[11] Six of the bus occupant fatalities were school-age children, with the remaining fatalities being adult drivers and passengers.[12] On average, there were 9 crashes per year in which an occupant was killed. The school bus occupant fatality rate of 0.23 fatalities per 100 million vehicle miles traveled (VMT) is more than six times lower than the overall rate for motor vehicles of 1.5 per 100 million VMT.[13]

The 2002 School Bus Safety Study provided fresh findings about possible enhancements to large school bus occupant crash protection that could be achieved through the use of lap/shoulder seat belts.[14] The results validated the possibility that a passenger who has a seat on the school bus and who was belted with a lap/shoulder belt could have an even lower risk of head and neck injury in a severe crash than on current large school buses.[15] However, given the existing safety of being transported on large school buses, exemplified by the low number of children that are seriously injured or killed, the societal benefit of further reducing, at a cost, an already extremely low likelihood of serious injury or death merited an open and robust debate. The agency grappled with whether Federal enhancements of an already very safe vehicle were reasonable and appropriate, especially when the cost of installing and maintaining lap/shoulder belts on the buses could impact the ability of transportation providers to transport children to or from school or related events or spend funds on other avenues affecting pupil safety.

Funds provided for pupil transportation are limited, and monies spent on lap/shoulder belts on large school buses usually draw from the monies spent on other crucial aspects of school transportation. Other pupil transportation expenses include purchases of new school buses to ensure that as many children as possible are provided school bus transportation, driver and pupil training on safe loading practices (most of the school bus-related fatalities occur outside the bus while children are being loaded or unloaded), on operational costs, such as fuel costs, and on upkeep and maintenance of school buses and school bus equipment. Given the tradeoff between installing seat belts on large school buses and implementing other safety measures that could benefit pupil transportation or other social welfare initiatives, and given that large school buses are already very safe, we believed that States should be permitted the choice of deciding whether belts should be part of their large school bus purchases.

Bearing in mind the already excellent safety record of large school buses and the real-world demands on pupil transportation providers, we did not believe that the available information indicated that seat belts on large school buses would address an unreasonable risk of injury or fatality, and so we did not propose in the NPRM that they be required by the FMVSS to be installed on these vehicles. However, we did want to provide the public the information we obtained from the school bus research program about the enhancements that lap/shoulder belts achieved in the sled test program. Further, in the NPRM, we wanted to inform transportation providers of the concern that purchasers should consider lap/shoulder belts on large school buses only if there would be no reduction in the number of children that are transported to or from school or related events on large school buses. We believed that reducing bus ridership would likely result in more student fatalities, since walking and private vehicles are less safe than riding a large school bus without seat belts.

We sought in the NPRM to articulate a best practices approach. We thought that the best practice would be for local decision-makers to consider the already excellent safety record of school buses, the economic impact on school systems incurred by the costs of seat belts and the impact that lap/shoulder belts have on the seating capacity of large school buses. We indicated that, if ample funds were available for pupil transportation, and pupil transportation providers could order and purchase a sufficient number of school buses needed to provide school bus transportation to all children, pupil transportation providers should consider installing lap/shoulder belts on large school buses. If a State were to determine that lap/shoulder belts were in its best interest, we encouraged the State to install those systems.

a. Comments in Favor of a Federal Requirement for Belts on Large School Buses

Widely divergent views were expressed in the comments to the NPRM as to whether seat belts should be required or permitted to be optional. Many commenters, including State and local jurisdictions, supported the approach of allowing purchasers the choice of deciding whether to include seat belts on their large school buses rather than of mandating the belts. The National School Transportation Association (NSTA)[16] stated that States and local districts should be given the option of whether to require seat belts on their school buses because States and local districts are in the best position to determine the most effective use of their limited resources, and because NSTA believed that entities that affirmatively choose to equip their buses with lap/shoulder belts are more likely to provide the necessary support to ensure that the belts are worn. However, several State groups were concerned that the NPRM's reference to the availability of 402 funds for the purchase and installation of seat belts on school buses could result in the states funding less-essential highway safety activities to the detriment of potentially more effective and worthwhile highway safety programs, such as buckle-up programs and those combating drunk or aggressive driving. There was widespread support of NHTSA's view that bus occupancy must

[9] School Transportation News, Buyers Guide 2007.

[10] This value was reported by School Bus Fleet 2007 Fact Book.

[11] ''Traffic Safety Facts—School Transportation Related Crashes,'' NHTSA, DOT HS 810 626. The data in this publication account for all school transportation-related deaths in transporting students to and from school and school related activities. This includes non-school buses used for this purpose when these vehicles are involved in a fatal crash.

[12] For the crashes resulting in the 11 annual school bus occupant fatalities, 51 percent of the fatalities and 52 percent of the crashes were from frontal collisions. Traffic Safety Facts 2005, School Transportation-Related Crashes, DOT HS 810 626.

[13] Traffic Safety Facts 2005, DOT HS 810 631.

[14] NHTSA's Preliminary Regulatory Evaluation accompanying the NPRM included the benefits of seat belts in rollover crashes and the Final Regulatory Evaluation accompanying this final rule will include the benefits of seat belts in side impacts.

[15] The tests were in a controlled laboratory investigation so assumptions are made about how representative the laboratory tests were of the real world, e.g., how representative the test dummies were of children, the sled test of an actual vehicle crash, the magnitude of the crash replicated as compared to real-world school bus crashes, and the ability of purchasers to purchase the belts without incurring an unreasonable trade-off in pupil transportation safety elsewhere.

[16] NSTA states that it is an association of private businesses providing transportation services to public school districts and private schools across the country.

not be reduced due to installation of belt systems. Many comments wanted to make sure that the final rule would permit new flexible school bus seat designs that have emerged in the marketplace (lap/shoulder belts on these bench seats can be adjusted to provide two lap/shoulder belts for two average-size high school students or three lap/shoulder belts for three elementary school students). Some advocacy groups embraced the NPRM as facilitating their efforts to get seat belts installed on large school buses.

However, several commenters (e.g., the National Association for Pupil Transportation (NAPT) and the New York Association for Pupil Transportation (NYAPT)) [17] expressed concern that not enough is known about belt systems to proceed with the rulemaking. These commenters were concerned whether seat belts could reduce the overall safety of school buses. NAPT believed that NHTSA should ensure that lap/belt systems do not negatively affect compartmentalization in any respect, and should quantify ''the marginal safety benefits (if any)'' that lap/shoulder belts provide beyond compartmentalization. The commenter stated that NHTSA should consider whether the belts could reduce safety through incorrect use, by impeding emergency evacuation, and by reducing safety in side impacts and rollovers (the commenter did not explain the concerns it had with the belts affecting side impact and rollover performance). NAPT believed that on-going agency research (discussed in the 2002 Report to Congress) should be completed before further action on this rulemaking is taken by NHTSA.

Similarly, the NTSB expressed concern that lap/shoulder belts have not been sufficiently researched in non-frontal crash modes, e.g., side, oblique and rollover crashes.

In contrast, notwithstanding the discussion in the NPRM that the agency was not proposing a requirement for belts in large school buses, many commenters urged the agency to go beyond what was proposed in the NPRM and require lap/shoulder belts on large school buses.[18] The National Coalition for School Bus Safety (NCSBS) stated that if lap/shoulder belts coupled with compartmentalization affords ''optimum protection'' as stated in the NPRM, lap/shoulder belts should be required on large school buses to provide occupants side and rollover crash protection. The commenter indicated that even though ''there has been no documentation of mortality or morbidity due to the 20 inch seat back height or failure of cushion retention,'' NHTSA proposed to increase seat back height and require self-latching cushions. The commenter believed that ''[t]his stands in sharp contrast with scores of documented fatalities and severe injuries proven to result'' in side and rollover crashes due to the absence of seat belts on large school buses.[19]

Similarly, the West Brook Bus Crash Families (WBBCF) [20] believed that the use of seat belts, in any vehicle, saves lives and reduces injuries and urged the agency to require seat belts on large school buses. The commenter believed that ''many 'real world' considerations are conspicuously absent from consideration without explanation'' and that the agency's ''cost/benefit 'balance' is arbitrary and capricious.'' WBBCF stated that speculation based on reductions in ''manufacturer capacity'' of bus seating ''are confined to a few elementary school routes and often resolved though [sic] better route scheduling.'' The commenter believed that ''[t]here is a complete absence of any real world evidence causally linking reduction in school bus seating capacity to increased risk of death or injury of alternative forms of travel.'' In addition, the commenter stated that ''NHTSA should clearly state the proven increases in occupant protection resulting from lap/shoulder belts use: 45–60% in frontal collision, 70% in rollover and lateral collisions for which compartmentalization alone is 'incomplete' and ineffective.'' The commenter believed that this effective rate would result in ''predicted life-saving and injury-reducing benefits of lap-shoulder belts using real world data (5–8 lives saved each year; 3,000–5,000 injuries reduced annually.'' The commenter questioned why the agency did not research whether belts could enhance compartmentalization in side crashes and rollovers in the 2002 School Bus Safety Study. In addition, the commenter believed that NHTSA should calculate the associated reductions in personal and societal costs due to lap/shoulder belts in terms of medical, insurance and liability expense, physical disability and trauma, emotional trauma, and lost education days. Further, the commenter also believed that NHTSA should have acknowledged a finding of the American Academy of Pediatrics that between 6,000 and 10,000 children per year are injured in school bus accidents, and that, the commenter believed, many of these injuries could be reduced by a lap/shoulder belt requirement.

Some commenters (e.g., the NCSBS and WBBCF) believed that lap/shoulder belts on large school buses should also be required to reinforce the message to children that they should ''buckle-up'' while riding in passenger cars and other private vehicles. NCSBS also stated that lap/shoulder belts would reduce driver distraction by improving student behavior, which in turn will help reduce driver distraction and the frequency of school bus crashes due to driver distraction.

Adding another facet to the comments were responses from school bus drivers and other school bus personnel. School bus drivers were universally opposed to having belts on the buses, believing that the belts were unnecessary, that they would impede emergency egress, and that drivers have limited means to get students to buckle up. George Davis of the Fayette County Schools bus shop expressed concern about the agency's calling lap/shoulder belts coupled with compartmentalization ''optimum crash protection.'' He was concerned that there was an implication that those who might choose to spend their resources on safety-related items other than belts would be going against the ''best practices'' discussed in the NPRM. He stated that it should be up to each purchaser to determine whether to purchase seat belts on large school buses, and that if a purchaser decides not to purchase the belts, then they are also determining what is the ''best practice'' for their needs.

Agency Response

After reviewing all the data, including the comments on the NPRM, NHTSA again concludes that large school buses

[17] The NAPT describes itself as a nonprofit organization that supports people who transport children to and from school. Its membership organizations include professional school transportation personnel in both the public and private sector, school bus manufacturers, and aftermarket service and product suppliers. The NYAPT represents supervisors and managers of both public school and private operators employed in local schools in New York State.

[18] As noted earlier, many other commenters opposed the idea of a requirement for belts on large school buses.

[19] No data was provided by the commenter explaining or supporting its reference to those fatalities and injuries; we know of no such data and cannot substantiate this statement.

[20] WBBCF states that it is a parent advocacy organization comprised of parents and family members of the 2006 West Brook High School girls' varsity soccer team, Beaumont, Texas. It states that in March 2006, a motor coach bus transporting the team to a playoff game overturned, killing two teammates and injuring others. The comment states that WBBCF was formed to advocate safer bus travel for school children, including the addition of lap/shoulder seat belts in school buses and motor coaches.

that meet our school bus safety standards without seat belts do not pose an unreasonable risk of death or injury in an accident. Thus, we do not find a safety need for a Federal mandate for seat belts on large school buses. However, our statutory authority expressly permits State or local jurisdictions to prescribe safety standards that impose higher performance requirements than the Federal safety standards for vehicles that are for the State's own use, such as school buses. Accordingly, we affirm that States and local jurisdictions should continue to be offered the choice of whether to order seat belts on their large school buses since the belts could provide enhancements to compartmentalization. We agree with NSTA that entities that affirmatively choose to equip their buses with lap/shoulder belts are more likely to provide the necessary support to ensure that the belts are worn properly. They are also more likely to be willing and able to instruct their students and drivers on emergency egress procedures affected by the belts. States and local districts need to examine the safest means of transport for their children, and this approach lets them decide how to spend their funds. Further, the performance requirements of this final rule for voluntarily-installed belts will help ensure that the belts enhance and do not degrade compartmentalization.

However, we are not able to concur with those commenters suggesting that lap/shoulder belts should be required on large school buses. The agency had to balance several compelling principles in this rulemaking. First, the agency considered the safety risks to which children on large school buses are exposed (how are children being injured or killed in school bus-related crashes) and whether seat belts would reduce that risk. Data indicate that children who are killed in school bus-related crashes are typically killed outside of the school bus as they are being loaded or unloaded onto the vehicle, by motorists passing the bus or by the school bus itself.[21] Inside the bus, the children are typically killed when they are in the direct zone of intrusion of the impacting vehicle or object. In the loading zone event, seat belts will not have an effect on preventing the fatality. In the intrusion zone, seat belts will similarly be unlikely to be effective in preventing the fatality, even in side impacts. In a rollover situation where there is ejection, the belts would have a beneficial effect, but the incidence of fatal ejections in rollover accidents occurring from a large school bus is rare.

WBBCF believed that ''NHTSA should clearly state the proven increases in occupant protection resulting from lap/shoulder belt use: 45–60 percent in frontal collisions, 70 percent in rollover and lateral collisions for which compartmentalization alone is 'incomplete' and ineffective.'' The effectiveness statistics to which WBBCF refers[22] are those that have been determined based on the crash experience of passenger cars and other light duty vehicles, although the effectiveness in passenger vehicles is much less than 70 percent in side impacts. These vehicles' crash experiences are different from that of large school buses. As noted earlier in this preamble, fatalities in frontal crashes of high severity are infrequent. In school bus side crashes, fatalities usually occur only in the area of intrusion from a heavy truck. Seat belts provide no benefit for an occupant sitting in an intrusion zone when struck by a large intruding object, but can provide benefits for those away from the intrusion zone. Although belts are effective in reducing the risk of fatality in rollovers due to ejection, there are very few fatal ejections in large school bus rollover crashes.

Nonetheless, seat belts may have some effect on reducing the risk of harm in frontal, side and rollover crashes, as they can help restrain occupants within the seat and not move about in the vehicle interior toward injurious surfaces.[23] For this final rule we have estimated the benefits that would accrue from the addition and correct use of lap/shoulder belts on large and small school buses in these crashes. For frontal crashes, we have estimated the benefits of the belts by using the sled test data obtained from the 2002 School Bus Safety Study, comparing dummy injury values with lap/shoulder belts versus injury values with compartmentalization. This analysis is explained in detail in the FRE accompanying this final rule. With regard to the estimated effectiveness of seat belts in large school bus side and rollover crashes, we have used the effectiveness statistics of 74 percent for rollover crashes and 21 percent for side impacts attributed to seat belts in passenger cars because no other information about the possible effect of belts in buses is available. With those data, we have estimated the benefits associated with the addition and correct use of lap/shoulder belts on large and small school buses.

The 2002 NAS study indicated that approximately 800 school aged-children are killed annually in motor vehicle crashes during normal school travel hours, among which only 0.5 percent were passengers on school buses and 1.5 percent were pedestrians involved in school bus related crashes. Seventy-five percent of the annual fatalities were to occupants in passenger vehicles and 24 percent were to those walking or riding a bicycle. Based on this study, the agency concluded that by far the safest means for students to get to school is by a school bus, and all efforts should be made to get as many students as possible onto school buses.

When making regulatory decisions on possible enhancements, the agency must bear in mind how improvements in one area might have an adverse effect on programs in other areas. The net effect on safety could be negative if the costs of purchasing and maintaining the seat belts and ensuring their correct use results in non-implementation or reduced efficacy of other pupil transportation programs that affect child safety. For example, some schools are currently eliminating school bus service for extracurricular activities or shrinking areas of school bus service due to high fuel prices.[24] Given that very few school bus-related serious injuries and fatalities would be prevented by a requirement mandating seat belts on large school buses, we could not assure that overall safety would not be adversely affected, particularly given the many competing demands on school resources and the widely varying and unique circumstances associated with transporting children in each of these districts. Nonetheless, this final rule does not prevent the installation of seat belts on school buses and provides appropriate performance requirements for these systems when they are installed.

It is worth noting, however, that our analysis of the data indicates that installing lap/shoulder seat belts on all large school buses would cost between

[21] ''Traffic Safety Facts 2006: School Transportation-Related Crashes,'' DOT HS 810 813.

[22] The correct effectiveness estimates in fatality reduction for passenger cars is 50 percent for frontal impacts, 74 percent for rollover crashes and 21 percent in side impacts.

[23] It is noted that raising the seat back height on school buses as required by this rule achieves a portion of that risk reduction for unbelted passengers on school buses. In the agency's 2002 School Bus Research Program, with compartmentalization, low head injury values were observed for all dummy sizes, except when override occurred. High-back seats were shown to prevent override.

[24] *http://www.usatoday.com/news/education/2008-07-09-schoolbuses_N.htm.*

$183 and $252 million.[25] Those belts would save about 2 lives per year if every child wore them on every trip. This estimate reflects the potential benefits of lap/shoulder belts in frontal, side, and rollover crashes. In addition, correctly worn lap/shoulder belts could prevent about 1,900 crash injuries each year if every child wore them on every trip. These benefits would be achieved at a cost of between $23 and $36 million per equivalent life saved. However, to achieve these benefits, school districts that choose to install belts on large school buses must have a program to ensure that belts are worn and worn correctly by the school bus passengers. If belts are not worn, they will offer no benefits to the passengers. If belts are worn incorrectly, e.g., shoulder belt tucked behind the passenger's back, they will not only not provide the desired additional protection, but may cause injuries. Absent a program to ensure belts are worn and worn correctly, the benefits of seat belts on large school buses will be lower than the numbers shown in our analysis, which assumes 100% belt use and all belts used correctly.[26]

In the NPRM, the agency emphasized its concern that installing lap/shoulder seat belts on large school buses would reduce the passenger capacity of the buses. After NHTSA completed its NPRM but before it published the NPRM in the **Federal Register**, seating system manufacturers Takata Corp. (Takata)/M2KLLC(M2K) [27] and the Safeguard Division of Indiana Mills Manufacturing Inc. (IMMI) separately approached the agency to introduce their ''flexible seating systems'' (or ''flex-seats.'') (As noted earlier in this preamble, these seating systems have lap/shoulder belts and are reconfigurable to accommodate either three smaller students or two larger students.) Many of the commenters referred to these systems with approval and asked NHTSA to ensure that the FMVSS No. 222 requirements under consideration would not prohibit flex-seat technology.

We have accommodated flexible seating systems (hereafter referred to as flexible occupancy seats or flex-seats), as requested, to facilitate the use of these new belt systems. However, although flex-seats may provide a way of offering lap/shoulder belts without lessening capacity on an individual given bus, there will still be a cost premium for outfitting school buses with the lap/shoulder belts, maintaining the seats, and training students and drivers on their use. The emergence of flex-seats on the market does not change our position concerning a Federal need to require lap/shoulder belts on large school buses.

On the capacity issue, WBBCF stated that it perceived the agency as speculating on its concerns about reduced seating capacity due to installation of lap/shoulder belts. The commenter stated that reductions in ''manufacturer capacity'' of bus seating ''are confined to a few elementary school routes and often resolved though [sic] better route scheduling.'' The commenter believed that ''[t]here is a complete absence of any real world evidence causally linking reduction in school bus seating capacity to increased risk of death or injury of alternative forms of travel.''

The agency believes that to some extent, the new flexible occupancy seats may have resolved some of the capacity reduction issues associated with the earlier versions of lap/shoulder belt seats in school buses. However, to the extent that transportation providers decide to use the older lap/shoulder belt equipped school bus seats, the extent of capacity reduction would depend on each route and may not always be resolved through better routing. In response to the WBBCF concern that there is an absence of any real world date linking reduction in school bus capacity to increased risk of death or injury, we disagree. The 2002 NAS study clearly shows that a reduction in school bus ridership would lead to children seeking a less safe form of transportation to and from school, leading to an increased risk of serious/fatal injury. The capacity of school buses, along with other characteristics such as bus length and overall weight, is often considered by transportation providers when determining which buses can be used for each route. To the extent that the same size bus could have less seating capacity and the transportation provider would not have sufficient resources to add additional buses and drivers, it could impact the level of school transportation service provided.

Some commenters advocating a requirement for belts on buses believed that NHTSA did not correctly analyze the pros and cons of a requirement for lap/shoulder belts on large school buses. The NCSBS thought it was inconsistent for NHTSA to not propose to require seat belts on large school buses even though it proposed to require higher seat backs and self-latching seat cushions, especially when, the commenter stated, ''there has been no documentation of mortality or morbidity due to the 20 inch seat back height or failure of cushion retention.'' In response, as part of good governance, NHTSA has the responsibility to assess whether each of its initiatives would be cost effective and propose those that are. The requirements on manufacturers and purchasers must involve the best use of its resources. The proposals for the higher seat backs was found to be effective and would not lead to reduced seating capacity or other negative consequences. We could not make the same determination about a Federal mandate to require lap/shoulder seat belts on all large school buses. The potential impact on pupil transportation resources from a Federal mandate may lead to higher overall risk.

WBBCF stated its belief that NHTSA should have acknowledged a finding of the American Academy of Pediatrics (AAP) that between 6,000 and 10,000 children per year are injured in school bus accidents, and that, the commenter believed, many of these injuries could be reduced by a lap/shoulder belt requirement. The AAP study referenced by WBBCF indicated that there are approximately 17,000 school bus related nonfatal injuries annually. Ninety-seven percent of those injured in the AAP study were treated and released from the hospital. The study used a sample of students treated in hospital emergency rooms for injuries which had the word ''school bus'' in the case description to generate an estimated nationwide total number of people injured. These numbers include injuries that are not traffic related such as slip and falls while boarding/alighting (injuries that cannot be prevented by any occupant protection system.) The study indicated that the school bus injuries were from the following causes:

- Crash Related—7,206
- Boarding/Alighting—84,056
- Slip/Fall—1,162
- Traffic, noncrash—860
- Other/unknown—3,749

In contrast to the AAP study, to determine the number of school bus crash related injuries, NHTSA used real world data where the injury resulted from a crash involving a vehicle in transport and on a public road. The number of crash related injuries reported in the AAP study correlates closely with our estimates of child passengers in school buses injured in school bus-related crashes

[25] The range in costs includes both 55 passenger buses (with loss of seating capacity) and 66 passenger buses with flexible seating (with no loss of seating capacity). However, they do not include the costs of a program to ensure correct belt usage.

[26] If, for example, only 50 percent of passengers were to wear seat belts, the benefits estimated above would be halved and the cost per equivalent life saved would rise to between $46 and $72 million.

[27] Takata (also known as TK Holdings) and M2K jointly developed a flexible occupancy seat.

(approximately 7,300 injuries annually.) Of these 7,300 injuries, NHTSA estimated that 94 percent were minor and non-incapacitating injuries. Based on this analysis, we believe that the 97 percent injured in the AAP study that were treated and released from the hospital only sustained minor injuries.

Regarding WBBCF's comment that NHTSA should calculate the associated reductions in personal and societal costs due to lap/shoulder belts in terms of medical, insurance and liability expense, physical disability and trauma, emotional trauma, and lost education days, the Preliminary Regulatory Evaluation (PRE) for the NPRM included such factors in its estimates. Likewise, the Final Regulatory Evaluation for this final rule also takes into account the comprehensive value of an injury and statistical life, which includes all of those factors relating to medical, insurance, pain and suffering and lost work days.

Finally, regarding Mr. Davis's comment, we agree that the best practice is for each purchaser to determine whether to purchase seat belts on large school buses and that part of such a decision is the thorough assessment of how the school's resources should be spent. We agree that if after weighing all the considerations a purchaser decides not to purchase the belts, then it is also determining what is best for its needs.

b. Other Issues Concerning Belts on Large School Buses

NHTSA does not agree that this rulemaking should be delayed until completion of the side impact research mentioned in the 2002 Report to Congress. In response to NYAPT, our side impact protection countermeasure research is still ongoing. We have been actively pursuing this research and expect to complete it soon. However, completion of this research is not critical to implementing regulations specific to the areas discussed in the NPRM or this final rule, such as seat belts, raising the seat back height, or requiring seat bottom cushions to be self-latching. The research in those areas has been completed. The ongoing research with respect to side impact improvements will in no way affect the outcome of the previous research, or the policies, performance and decisions related to this final rule.

Further, we do not believe that additional research is necessary to show ''that the newly developed systems adequately protect children of all sizes in severe side impacts'' as suggested by the NTSB. For near side impact, the agency's 2002 testing and the NTSB studies have well documented that seat belts will provide very limited occupant protection for those in direct line with the impact force. This is similar to near side occupants in passenger vehicles and the current agency school bus side impact research is geared to address this condition.

With regard to the belief that seat belts on large school buses should also be required to reinforce the message to children that they should wear belts in passenger vehicles, NHTSA studied the issue in 1985. The agency found that children were able to understand that the bus environment was different than that of a passenger car, and that not having belts on school buses did not dilute the buckle up message for family vehicles.[28] NHTSA did a follow-up literature review in 2007 and determined that the results of the 1985 study are likely unchanged. See, ''School Bus Seat Belts and Carryover Effects in Elementary School-Aged Children'', which we have placed in the docket for this final rule.

c. Comments in Favor of a Federal Ban of Lap Belts in Large School Buses

In the NPRM, we decided against prohibiting lap belts on large school buses. Although we acknowledged that laboratory research, including our own on lap belted dummies, showed relatively poor performance of lap belts in large school buses, we could not conclude that the addition of lap belts in large school buses reduced overall occupant protection such that they should be banned. We noted that lap belts were required in three states (New York (NY) (1987), New Jersey (1994), Florida (2001)), in many other school districts, and in special-needs equipped school buses. We stated that our examination of NY State school bus crash data for lap belt equipped and non-belt equipped buses could not conclude that lap belts either helped or hurt occupant injury outcomes.

A number of commenters to the NPRM wanted NHTSA to ban lap belts. The NTSB believed that NHTSA's 2002 school bus test program showed that lap belts ''afford occupants little if any safety benefit above that achieved by compartmentalization alone and may cause additional neck and abdominal injury.'' The NTSB and the National Association of State Directors of Pupil Transportation Services (NASDPTS)[29] believed that since lap belts are not an acceptable means of occupant protection in passenger cars, light trucks, or small school buses, lap-only belts should not be installed on large school buses. Similarly, NYAPT believed that NHTSA should prohibit the installation of lap belts on school buses and clearly state what the commenter believed were the inherent risks associated with their use. In addition, the commenter stated that few NY school districts require the use of lap belts by student passengers. Accordingly, it believed that the agency's statements in the NPRM relating to the evaluation of New York crash data should be corrected. The commenter stated that the agency should not have determined that the data from New York is inconclusive, but rather that seat belt usage in school buses is so minimal and inconsistent that there is no relevant data to analyze and compare.

Agency Response

In response to NYAPT's comment, we stand by our statement in the NPRM that we cannot conclude that lap belts either helped or hurt occupant injury outcomes. It was not possible to estimate lap belt performance or effectiveness.

Crash data have consistently shown that lap belts are a good safety device in passenger vehicles, even though lap/shoulder belts are more effective when worn properly. We currently allow a lap belt in the front center seat of a passenger vehicle, and we allow lap belts in medium to heavy vehicles over 4,536 kg (10,000 pounds) GVWR. Lap belts have been shown to be almost as effective as lap/shoulder belts in rollover crashes, and benefit far side occupants in side impacts involving these vehicles.

The NPRM did not propose to ban lap belts on large school buses and we decline to concur at this time that lap belts should be prohibited on large school buses. The large school bus environment is different from that of small school buses, passenger cars, and small trucks and vans, and experiences less severe crash forces. Thus, the type of restraint that is appropriate for each may differ. A state might want to install seat belts on their school buses to supplement compartmentalization in side or rollover crashes, and we are unable to conclude that if they do, they must install lap/shoulder belts, given

[28] Gardner, A. M., Plitt, W., & Goldhammer, M. (1986). ''School bus safety belts: Their use, carryover effects and administrative issues,'' (Final Report No. DOT HS 806 965). Washington, DC: National Highway Traffic Safety Administration.

[29] The NASDPTS states that it represents State directors responsible for school transportation in each state, school bus manufacturers and other industry suppliers, school transportation contractors, and associations with memberships that include transportation officials, drivers, trainers and technicians.

the additional cost and potential reduced capacity associated with such Type 2 restraints over lap belts and the absence of real-world injury data.

d. Comments on Use of Section 402 Highway Safety Grant Funds

In the NPRM, we noted that certain highway safety grant funds may continue to be used to fund the purchase and installation of seat belts (lap or lap/shoulder) on school buses. Annually, all States, the District of Columbia, Puerto Rico, the Bureau of Indian Affairs, and the U.S. territories receive NHTSA section 402 State and Community Highway Safety Formula Grant Funds. A wide range of behavioral highway safety activities that help reduce crashes, deaths, and injuries, including seat belt-related activities, qualify as eligible costs under the section 402 program. Each State determines how to allocate its funds based on its own priorities and identified highway safety problems as described in an annual Highway Safety Plan (HSP). We stated that, as with all proposed expenditures of section 402 funds, the purchase and installation of seat belts on school buses must be identified as a need in the State's HSP and comply with all requirements under 23 U.S.C. Part 1200. Section 402 funds may not be used to purchase the school bus in its entirety, but may fund only the incremental portion of the bus cost directly related to the purchase and installation of seat belts.

1. Use of Existing Federal Grant Funds To Purchase Seat Belts

In response to the NPRM, the Governors Highway Safety Association (GHSA), Georgia Governor's Office of Highway Safety (GOHS), and Maryland Department of Transportation wrote that although lap/shoulder belts on large school buses is an important safety issue, the biggest danger to children, as evidenced by years of data, is in the area around school buses and on the way to and from school. The commenters stated that emphasizing the use of Federal 402 funds for school bus safety represents a significant shift in Federal policy, but there is no evidence to support such a shift. They expressed concern that the impact on the 402 program is potentially enormous and devastating to a State's highway safety program, could eliminate a State's entire apportionment and still barely pay for the costs of the improvement. They believe that from a cost/benefit perspective, this solution threatens many other higher priority objectives, including impaired driving prevention, child passenger safety, and aggressive driving. For example, Maryland stated that in the past 10 years, there has been one school bus occupant-related fatality in the State of Maryland. In contrast, the commenter stated, in 2006 in Maryland there were 199 fatal crashes involving alcohol, 79 fatal crashes involving aggressive drivers, 95 fatal crashes involving pedestrians, 83 fatal crashes involving motorcycles, and 102 fatal crashes involving young drivers. Maryland expressed the view that because of media coverage of recent school bus crashes, ''states may be pressured to spend federal highway safety money for this purpose [seat belts on large school buses], at the expense of many competing highway safety needs.''

The GOHS stated that in the NPRM, NHTSA chose not to calculate the costs of installing seat belts on large school buses, because installation is voluntary. It stated its belief that local school districts that wish to install safety belts on large school buses would incur sizable costs. The GOHS also stated that most school districts identify the specifications for new school buses and then they put the specifications out to bid. They further stated that costs of improvements are not individualized, but are part of the overall cost of the new bus design. It would therefore be difficult for school districts to determine the incremental cost of a single improvement and then invoice the state highway safety office just for the improvement.

Agency Response

NHTSA does not agree that using Federal safety grant money to install safety equipment on school buses represents a significant shift in Federal policy. For example, when we issued final rules in the early 1990s requiring stop arms and upgraded mirror systems on school buses as a means to provide enhanced protection for children who ride school buses, we specifically allowed Federal safety grant funds to be used to purchase the newly specified school bus safety equipment.

Nothing in this final rule changes the fact that deciding how to use section 402 grant funds is at the discretion of each State. If a State should decide that lap/shoulder belts on large school buses is a safety priority, NHTSA is simply stating that the Federal safety grant funds may be used to purchase the belts. If a State should choose to purchase seat belts, its decision must be based on the State's own priorities identified in its Annual Highway Safety Plan and comply with all requirements under 23 CFR Part 1200. Section 402 funds may not be used to purchase the entire school bus, but may fund only the incremental portion of the bus' cost that is directly related to the purchase and installation of seat belts. NHTSA has also determined that in addition to using section 402 funds, 23 U.S.C. section 406 Safety Belt Performance Grant Funds can be used to fund the incremental portion directly related to the purchase and installation of seat belts on school buses.

NHTSA is aware that many important safety issues compete for funding from each State's Federal safety grant funds. Therefore, it is imperative that each State base its selection for fundable projects on its highway safety priorities. For States considering the installation of seat belts on large school buses, NHTSA has provided estimates of the cost to install seat belts in large school buses in the Preliminary Regulatory Evaluation that was available in the docket (NHTSA–2007–0014–0005.1) for the NPRM. NHTSA believes that in order to determine the incremental cost of seat belts on large school buses, when it orders the school buses, it would be a simple matter for the State to ask the school bus manufacturer for an itemized list of options, including seat belts.

2. Additional Federal Grant Funds To Purchase Seat Belts

The GOHS, North Carolina Dept. of Public Instruction, the National Association of State Directors of Pupil Transportation Services (NASDPTS), and the Texas Department of Transportation all sought additional funding for school bus improvements in NHTSA's next reauthorization. The commenters believe that additional funding is needed in order to make a change in school bus seating viable on a widespread basis. They asked NHTSA to establish a ''separate designated federal fund source'' (using NASDPTS' words) to offset the additional cost of lap/shoulder belts on school buses, either within section 402 or apart from it. The commenters stated that existing funds are insufficient to implement lap/shoulder belts without significant cutbacks in other highway safety initiatives. NADSPTS commented: ''When this NPRM was introduced, the general public was given the impression through the media and news releases that school bus lap/shoulder belt funding would be made available, not that we would have to compete for existing section 402 funds.''

NHTSA Response

NHTSA has not identified any additional funds that can be used as a separate set-aside for the purchase of seat belts on school buses. NHTSA emphasizes that it makes available

existing Federal safety grant funds only if a State, in its Annual Highway Safety Plan, includes school bus safety initiatives related to improving the protection of children that ride in school buses.

V. Overview of Upgrades to Occupant Crash Protection Standards

a. Summary of the NPRM Proposed Upgrades

After considering the findings of NHTSA's 2002 School Bus Safety Study, the NPRM proposed several sets of upgrades to the school bus safety requirements. The first set of upgrades involved improving the compartmentalized school bus interior for all school buses. Seat back height was proposed to be increased from 508 mm (20 inches) to 610 mm (24 inches) to reduce the potential for passenger override in a crash. We also proposed to require self-latching mechanisms for school buses with seat bottom cushions that are designed to flip up or be removable without tools.

The second set of upgrades proposed to require small school buses to have lap/shoulder belts instead of just lap belts. The lap/shoulder belt systems were to fit all passengers from ages 6 through adult, to be equipped with retractors, to meet the existing anchorage strength requirements for lap/shoulder belts in FMVSS No. 210, and to meet new requirements for belt anchor location and torso belt adjustability. The seat belts were to meet a ''quasi-static'' test requirement to help ensure that seat backs incorporating lap/shoulder belts are strong enough to withstand the forward pull of the torso belts in a crash and the forces imposed on the seat from unbelted passengers to the rear of the belted occupants. A minimum seat belt width of 380 mm (15 inches) was proposed for belted occupants. In addition, the vehicles had to meet FMVSS No. 207 because the load in some seating configurations imposed by FMVSS No. 207 is greater than the load that would be imposed by FMVSS No. 222's seat performance requirements.

The third set of upgrades involved requirements for voluntarily-installed seat belts on large school buses. For large school buses with voluntarily-installed lap/shoulder belts, it was proposed that the vehicle meet the requirements described above for lap/shoulder belts on small school buses, except the quasi-static test would be slightly revised for the large school buses to account for crash characteristic differences between the vehicles. (Due to the mass and other characteristics of the vehicles, in crashes typically small school buses are subject to higher severity crash forces than are large school buses.) Further, we did not propose to apply FMVSS No. 207 to large school buses.

b. Overview of Comments

Commenters [30] generally supported the proposed increase in seat back height, citing the increased compartmentalization and safety benefits that higher seat backs would provide. Some seat manufacturers and members of the general public asked that seat backs be made even higher than the proposed 610 mm (24 inches), to protect against whiplash or to meet Federal head restraint standards. On the other hand, most school bus drivers and some members of the general public opposed raising the seat back height, mainly due to concerns about decreased driver visibility of students and potential discipline problems. Similarly, most comments also acknowledged the safety benefit of self-latching mechanisms for seat cushions. However, the NTSB commented that the weight required to activate the latching mechanism (that of a 6-year-old child) did not guarantee attachment of the cushion.

There was widespread support for the proposed requirement for lap/shoulder belts on all small school buses from the commenters (school bus seat and restraint manufacturers, transportation providers and other organizations). A number of commenters asked that ''small school bus'' be redefined to include similarly built buses that have a GVWR of over 4,536 kg (10,000 pounds). In addition, the National Child Care Association was concerned that the NPRM, if made final, would result in increased costs for the multifunction school activity bus.

Commenters generally supported the proposed performance standards for school buses, with bus, seat, and restraint manufacturers providing detailed comments on technical aspects of the test procedures and performance requirements. Many commenters asked NHTSA to ensure that the proposed seat width minimum of 380 millimeters (mm) (15 inches) did not prohibit flex-seats.

c. Post-NPRM Testing

To support this final rule, NHTSA performed additional research after the NPRM was published. The testing was done to verify analyses used to derive NPRM test values and to address questions raised by comments to the NPRM. Below, we provide a brief description of the post-NPRM testing and how some of the results affected this final rule. A more complete discussion of the post-NPRM testing can be found in the technical document supporting this final rule (2008 Technical Analysis).[31]

Both dynamic and static testing was performed. The tested seats were lap/shoulder equipped and manufactured by CEW, IMMI and Takata. The CEW seat is a unified frame seat back design with two fixed lap/shoulder belts. The IMMI and Takata seats are flex-seat designs with configurations of 3 and 2 occupants per bench. The IMMI design has a dual-frame seat back, with the outer frame providing compartmentalization of the rearward occupants and the inner frame anchoring the lap/shoulder belt for the occupant of the seat.

Sled testing of school bus seats was performed in a manner similar to the 2002 School Bus Safety Study.[32] However, testing was performed using both the large and small school bus crash pulse, rather than just the large school bus pulse use in previous testing. This testing helped the agency gain general insight into the dynamic performance of flex-seat designs.

The small school bus sled testing was also specifically performed to verify the proposed torso body block pull force applied in the quasi-static test. The proposed value had been derived through mathematical calculation using Newtonian mechanics and measurements made in large school bus pulse sled testing. The results of the new testing confirm that the proposed small school bus torso body block pull force is appropriate.

The small school bus sled testing was also useful in verifying the peak dynamic loading on the entire seat structure. These data were used in our analysis of the need for implementing

[30] The commenters included school bus seat and restraint manufacturers or consultants (AmSafe Commercial Products (AmSafe), C.W. White Company (CEW), Concepts Analysis Corp., Freedman Seating Company, IMMI, M2K, Takata, school bus manufacturers and their professional associations (Blue Bird Corp., Girardin Minibus Inc., IC Corp. (IC), National Truck Equipment Association/Manufacturers Council of Small School Buses (MCSSB), and Thomas Built Buses, Inc., the NTSB, the National Association of State Directors of Pupil Transportation Services (NASDPTS), numerous other organizations, and the general public.

[31] ''NHTSA Technical Analysis to Support the Final Rule Upgrading Passenger Crash Protection in School Buses,'' September 2008.

[32] ''NHTSA Vehicle Research and Test Center's Technical Report on Dynamic and Quasi-Static Testing for Lap/Shoulder Belts in School Buses,'' September 2008. See docket for this final rule.

the FMVSS No. 207 requirements to the seats during the FMVSS No. 210 testing.

The agency performed extensive testing to address comments related to the proposed quasi-static test.[33] [34] A particular focus of this testing was the many issues raised by potential allowance of flex-seats in the final rule. Through this test work, the agency determined that it would be appropriate to increase the preload and the zone where the torso body blocks are initially placed.[35] We also determined that the quasi-static test could be applied to flex-seats in all potential seating configurations. A similar determination was made when flex-seats were tested to the FMVSS No. 210 requirements for seat belt anchorages. The FMVSS No. 210 testing can be performed on flex-seats in all potential seating configurations.

To address comments specific to dual-frame seats, the agency also verified the ability to measure seat back displacement in the quasi-static test in addition to, and separate from, anchor point displacement.

d. How This Final Rule Differs From the NPRM

The following are the most important differences between the final rule and the NPRM:

1. The minimum seat width requirement is revised to accommodate flexible occupancy seats (flex-seats). Further, quasi-static loading requirements appropriate for flexible occupancy seats are adopted.

2. The quasi-static test at S5.1.5 of FMVSS No. 222 will limit the displacement of the torso belt anchor point *and* the seat back, rather than just the anchor point. This change was made to make the requirement more performance oriented, and not unnecessarily restrict seat designs that incorporate other than unified frame design. Further, to address practicability concerns, the performance limit on anchor point displacement is revised to allow the equivalent of four degrees of additional rotation.

3. In the quasi-static test, the energy absorption requirement will specify that the seat back force-deflection signature must stay below the upper bounds of existing force/deflection zone upper boundary of FMVSS No. 222. In addition, the torso belt adjustment must be maintained during the test.

4. To accommodate flex-seats, the torso anchor point minimum height requirement of FMVSS No. 210 will allow, but not require, the center seating positions in flex-seats to only accommodate an occupant as large as an average 10-year-old child, rather than an adult male. Such a center seating position is defined as a ''small occupant seating position'' (SOSP) and will be marked as such by way of a label on the seat belt for that seating position. In addition, the minimum lateral anchorage separation requirement is modified to allow a reasonable accommodation of existing designs of flex-seats and non-flex-seats.[36]

e. Organization of Discussion

The discussion of the amendments made by this final rule are organized as follows: Upgrades for all school buses (seat back height; cushion latches); upgrades for small school buses (requiring lap/shoulder belts; FMVSS No. 207; other issues); upgrades for large school buses (requiring voluntarily installed belts to meet performance requirement,); performance requirements for vehicles with seat belt systems (seat width requirements; seat belt anchorage requirements (FMVSS No. 210); quasi-static test; other issues).

For the NPRM, NHTSA prepared a 2007 Technical Analysis that, among other things, presented a detailed analysis of data, engineering studies, and other information supporting these amendments. A copy of the document was placed in Docket NHTSA–2007–0014. As indicated above, an updated 2008 Technical Analysis has also been prepared and placed in the docket for this final rule. In addition, several other technical reports supporting this final rule have also been placed in the docket. The agency refers to these documents from time to time in this preamble.

VI. Upgrades for All School Buses

a. Seat Back Height

In the NPRM, we proposed that the minimum seat back height for school bus seats (specified in FMVSS No. 222) be raised from a minimum 508 mm (20 inches) to 610 mm (24 inches). This increase in minimum seat back height was supported by agency-conducted sled tests that assessed the compartmentalization performance of 508 mm (20 inch) and 610 mm (24 inch) seat backs for large (50th percentile male) occupants. The results of these tests indicated that 610 mm (24 inch) seat backs would provide more effective compartmentalization for larger occupants than 508 mm (20 inch) seat backs. In tests with the higher seat back, the extent to which the dummies overrode the seats in front of them was lessened. The higher seat back was also effective in reducing head contact with test dummies that were placed in seats forward of the dummies. In tests using the 508 mm (20 inch) seat backs where dummy head contact did occur because of override, the HIC15 values tended to be well above the established IARVs.

In general, the commenters supported the proposal for the increase in seat back height to 24 inches. Three school bus seat and restraint manufacturers (Concepts Analysis Corp. (Concepts), CEW, and Takata) supported an increase in seat back height, with CEW agreeing with the proposed seat back height and barrier area and both Concepts and Takata recommending that the minimum seat back be increased as set forth in FMVSS No. 202a. Three school bus manufacturers and associations (Thomas Built Buses, Inc. (Thomas), National Truck Equipment Association/Manufacturers Council of Small School Buses (NTEA/MCSSB), and Girardin Minibus, Inc. (Girardin)) agreed with the proposed increase in seat back height. However, Thomas, NTEA/MCSSB, and Girardin requested that this requirement not apply to the last row of seats because it was believed that there is no rearward occupant to compartmentalize, driver visibility through the rear window would be better, and a lower seat back would allow for more knee room in the last row. Those opposing the proposal expressed concern about reduced driver visibility of students.

Agency Response

This final rule increases the minimum seat back height for school bus seats to 610 mm (24 in), as proposed in the NPRM.

1. In response to Takata *et al.*, when FMVSS No. 202a begins to phase-in for rear seats in the 2011 model year, it will require that any head restraints provided in the rear outboard seats (they are optional) must have a minimum height of 750 mm (29.5 inches) above the H-point.[37] This requirement will be applicable to passenger vehicles, trucks

[33] *Id.*

[34] ''FMVSS No. 222 School Bus Seat Quasi-Static Testing for Various School Bus Seats Equipped with Type 2 Seat Belts, Test Procedure Development Testing,'' General Testing Laboratories, Inc., August 2008. See docket for this final rule.

[35] ''FMVSS No. 222 School Bus Seat Quasi-Static Testing for Various School Bus Seats Equipped With Type 2 Seat Belts, Torso Block Preload and Positioning,'' General Testing Laboratories, Inc., July 2008. See docket for this final rule.

[36] To address small occupant seating positions, in FMVSS No. 208, ''Occupant crash protection,'' dimensions of a 10-year-old child are added to the provisions (at S7.1.5) that specify dimensions of the occupant that must be restrained by a seat.

[37] For illustration purposes, the H-point is similar to the actual SgRP of the seat as opposed to the design SgRP. It is found by placing the SAE J826 manikin in the seat.

and buses, including school buses, with a GVWR of 4,536 kg (10,000 pounds) or less. Under FMVSS No. 202a, rear seats are not required to have a head restraint but if the seat back is above 700 mm above the H-point, it is considered a ''head restraint'' and must meet the requirements of the standard. Outboard school bus seats meeting the 610 mm (24 inch) requirement will not have to meet the rear seat provisions of FMVSS No. 202a unless they are over 700 mm above the H-point, or 90 mm (3.5 inches) in excess of the 610 mm (24 inch) limit. We will not raise school bus seat back heights above 24 inches in this final rule because the greater mass of large school buses reduces the potential risk of whiplash for their occupants (the harm addressed by FMVSS No. 202a) in comparison to other vehicles on the road and a seat back height of 610 mm (24 inches) will offer better whiplash protection to a broader spectrum of school-aged children than would a height of 508 mm (20 inches).

It should be noted that this final rule only requires that seat backs be a minimum of 610 mm (24 inches). If individual states, counties, or school districts wish to specify a seat back higher than 610 mm (24 inches), they are free to do so. As noted above, FMVSS No. 202a would apply to small school buses with seat backs above 700 mm.

2. We are denying the request that the minimum seat back height requirement not be applied to the last row of seats. There is no current exemption for the seat back height of the last row of seats. Given that there are rigid structures in a school bus rearward of the last row, this additional seat back height will provide added potential protection to the occupants of the last row in the event of a rear impact. Further, the occupants of the last row should be afforded the better whiplash protection offered by the 610 mm (24 inch) seat back.

The argument that the height should be reduced to improve driver visibility is not persuasive. Since the row directly forward of the last row would not be exempted from the seat back height requirement, any decrease in driver visibility due to the seat back of the rearmost row would be minimal. (Further discussion of the driver visibility issue is provided below.)

Finally, it was stated that additional knee space would be available if the last row did not have to be 610 mm (24 inches) high. If we assume a seat back with a 12 degree angle from the vertical, the higher seat back height would necessitate the rear seat row to move forward approximately 21 mm (0.84 inches) [100 mm × tan(12deg.)]. This change could be spread evenly over the entire length of the vehicle, resulting in a negligible difference in leg room for each row of seats.

3. With regard to reduced driver visibility of the students, as discussed in the NPRM preamble and in comments from school transportation providers, a number of states, including Illinois, New Jersey, New York, Ohio, North Carolina and Washington, already require seat back heights of 610 mm (24 inches) in their school buses. We are not aware of reports of visibility problems or insufficient discipline of students on the buses. In fact, the Monroe-Woodbury Central School District indicated that the 24-in seat back improved student behavior as students were unable to easily hang over the tops of the seat backs to interact with friends in distant rows, but instead had to converse with passengers around him or her while staying seated. Additionally, as pointed out by some commenters, increasing the minimum seat back height to 610 mm (24 inches) would make the minimum seat back height the same as the industry designations from the 2005 edition of the National School Transportation Specification and Procedures (NSTSP) for minimum seat back height.

4. Mr. James Hofferberth stated that NHTSA ''has failed to consider alternative [compartmentalization] strategies, such as a reduction of seat height to reduce cost, coupled with the provision of a vertical transverse containment panel from the top of the seat to the ceiling of the bus.'' To our knowledge, there is no compartmentalization strategy such as that discussed by the commenter that has been tested and proven in both effectiveness and feasibility as compartmentalization. Therefore, at this time, such alternatives are not viable alternatives to the heightened seat back approach.

b. Seat Cushion Latches

NHTSA proposed to amend S5.1.5 of FMVSS No. 222 to require latching devices for school bus seats that have latches that allow them to flip up or be removed for easy cleaning. We also proposed a test procedure that would require the latch to activate when a 22 kg (48 pounds) mass is placed on top of the seat at the seat cushion's center. The 22 kg (48 pounds) mass is that of an average 6-year-old child. The test was to ensure that any unlatched seat cushion would latch when a child occupant sits on the seat.

In general, comments addressing this issue supported the proposal. The NSTA noted that New York and Connecticut already require self-latching mechanisms for seat cushions in their buses, and NCDPI stated that they now require positive locking devices on their school bus seats. They did not provide any details on the specifications they require. CEW noted that currently, manually operated seat cushion latches can inadvertently be left unlatched after cleaning, and that the proposed self-latching mechanisms could ''benefit safety in a crash situation.'' Concepts believed that this requirement ''should add only pennies to the cost of [a] school bus seat.''

While NTSB supported a requirement for self-latching mechanisms for school bus seat cushions, it had concerns about the proposed test requirements regarding the mass required to activate the latch. It stated that its concern that ''some designs of flip-up or removable seats that comply with this standard may allow the seat to come loose during a crash or rollover if a sufficient weight is not applied to the seat cushion for the self-latch to activate.'' NTSB stated that the load requirement should be removed from the proposed seat cushion retention standard unless NHTSA can verify that all seats with this design are hinged and cannot fully separate from the seat frame when the latch is not activated.

Agency Response

This final rule adopts the requirement that self-latching mechanisms be installed on school bus seat cushions that flip up or are removable. We acknowledge that, under the requirement, some cushions could still come loose during a crash because the latch would only be required to activate under a 22 kg (48 pounds) mass. While latching devices which activate under the weight of the seat cushion alone (as NTSB suggested) would be preferred, at this time we have not received any data indicating the minimum loads that are required to activate latches of this type. We specify 22 kg (48 pounds) because that is the mass of the 50th percentile 6-year-old child, *i.e.*, a child in kindergarten or first grade. The cushion will thus latch when a child sits on it. We received no data in response to the NPRM that indicate alternative loads. Therefore, we do not have the information necessary to support removing or reducing this load requirement.

One commenter described the currently-used seat cushion latches as ''primitive'' and ''hard to open,'' and state that ''they are not always secured fully when [they] get the seat back down.'' We believe that such problems

may be the main reason why school bus seat cushions are not always secured to the seats in current school buses. With self-latching devices that meet the proposed requirements, a bus driver would only have to firmly push down on the top of the seat cushion to re-attach it after cleaning. This greatly simplifies the process of latching the seat cushions, making it much more likely that they will be properly attached to the seats.

Finally, regarding a comment from the National Child Care Association, we do not require that seat cushions flip up, but rather have adopted a requirement for self-latching mechanisms that would be installed on seat cushions that do flip up or are removable.

VII. Upgrades for Small School Buses

a. Requiring Lap/Shoulder Belts

The agency proposed that small school buses be required to have lap/shoulder belts at all passenger seating positions. Since the FMVSSs were first promulgated, small school bus passenger seats have been required to have passenger lap belts (defined as Type 1 belts in FMVSS No. 209) as specified in FMVSS No. 208, belts that meet the lap belt strength requirements specified in FMVSS No. 210. Lap/shoulder belts provide an increased level of protection from lap belts in small school buses by reducing the potential of head and neck injuries in frontal impacts.

All commenters supported the proposal. Accordingly, this final rule adopts the requirement for the reasons stated in the NPRM. The seat belt systems are required to meet the performance requirements of FMVSS Nos. 208, 210, and 222 as discussed in the NPRM and this final rule. (Under current requirements, the seat belts already must meet FMVSS No. 209, ''Seat belt assemblies.'')

b. Raising the Weight Limit for Small School Buses

Historically the dividing line between what is considered a ''large'' and a ''small'' school bus is the GVWR delineation. School buses with a GVWR above 4,536 kg (10,000 pounds) are large school buses, while school buses with a GVWR of 4,536 kg (10,000 pounds) or less are small school buses.

In response to the NPRM, several commenters suggested raising the weight limit for small school buses from 4,536 kg (10,000 pounds) to 6,576 kg (14,500 pounds). IMMI stated that the small school bus requirement that lap/shoulder belts be installed at all seating positions should apply to all school buses that are built on a van chassis, which are known in the industry as type ''A'' school buses. The commenter stated that these consist of type ''A–1'' school buses, which have a GVWR of 4,536 kg (10,000 pounds) or less, and type ''A–2'' school buses, which have a GVWR that can range up to 6,576 kg (14,500 pounds). IMMI explained that both the type A–1 and the type A–2 buses are built on similar van chassis, and so they are both exposed to similar operating and crash environments. Another commenter stated that the National School Transportation Specifications and Procedures (NSTSP) for school bus types defines Type A–1 school buses as having an upper weight limit of 6,576 kg.[38] Thus, this comment suggested, it would be easier to determine which school buses must comply with the lap/shoulder belt requirement if NHTSA's definition of small school buses followed the NSTSP recommendation.

Agency Response

The suggestion to raise the weight cut-off for small school buses to include Type A–1 buses with a GVWR below 6,576 kg (14,500 pounds) may have, but it is beyond the scope of this rulemaking. We also note that the suggested change in weight limit is not trivial. Expanding the small school bus category as suggested would result in a substantial increase in the fleet percentage of small school buses, i.e., from 7.2 to 24 percent.

c. FMVSS No. 207, Seating Systems

In the NPRM, we proposed to apply FMVSS No. 207 to small school buses with lap/shoulder belts because the load imposed by FMVSS No. 207 appears to be greater than the load that would be imposed by FMVSS No. 222's seat performance requirements at S5.1.3.

There was no consensus between commenters. CEW disagreed with the proposal to apply the FMVSS No. 207 loading to small school buses. It explained that ''[m]any of our customers request that we pull the FMVSS No. 210 test to higher forces than those required by NHTSA to insure that they have a 'safety margin' above NHTSA's requirement * * * Most of our customers ask us to pass FMVSS No. 210 by 110% or 120% * * * If FMVSS No. 207 and FMVSS No. 210 are added and customers still want 110% and 120%, we would be adding safety factors to safety factors, as well as undue additional costs.'' In contrast, IMMI agreed that FMVSS No. 207 should apply to all small schools buses and ''all van-based, A type school buses, regardless of their GVWR.''

Blue Bird Corp. (Blue Bird) disagreed with the proposal. Using the data the agency provided in the NPRM, it provided an extensive analysis showing that for a seat bench with three lap/shoulder belts, the FMVSS No. 210 load is 130 percent [18,000 pounds/(11,802 + 2,040) pounds] of the total dynamic load on the seat, plus the load that would be imposed by FMVSS No. 207.

If the final rule makes FMVSS No. 207 applicable to small school buses with lap/shoulder belts, Blue Bird requested an exemption for a ''davenport'' mounted seat which ''consists of separate seat cushion and seat back assemblies of wood or plastic, foam, and upholstery fastened to the bus body structure forming the front and top of the engine compartment.'' However, Blue Bird stated that it was unaware of such rear engine configurations for small school buses.

Agency Response

With respect to Blue Bird's analysis, the commenter used the peak total force on the seat in the large bus sled tests performed by the agency (35,000 N (7,869 pounds)).[39] Using an assumption expressed in the NPRM (regarding the quasi-static test) that belt loads for the small school bus situation would be 1.5 times that of the large school bus, the commenter estimated that the total seat force for a small school bus seat occupied by two persons would be 52,000 N (11,803 pounds).[40]

The agency now has actual measurements of total seat load in a small school bus crash pulse, and has found that the ratio of large to small school bus forces is about 58 percent.[41] [42] Using this actual small school bus total seat loading, we have estimated the extent to which the FMVSS No. 210 load combined with the FMVSS No. 207 load exceeds the actual measured total load on the seat.

By first assuming the seat in question has three lap/shoulder belt positions,

[38] This information is different than that provided by IMMI, but the difference is inconsequential to the commenters' arguments.

[39] These seats were occupied by two 50 percentile male Hybrid III dummies.

[40] Rather than the value used by Blue Bird, however, the agency actually derived a range of potential ratios for the small to large school bus belt loads from 1.1 to 2.4 times. We choose 1.5 in the NPRM out of a concern for practicability in the quasi-static test.

[41] ''NHTSA Technical Analysis to Support the Final Rule Upgrading Passenger Crash Protection in School Buses,'' September 2008.

[42] ''NHTSA Vehicle Research and Test Center's Technical Report on Dynamic and Quasi-Static Testing for Lap/Shoulder Belts in School Buses,'' September 2008.

we calculate that the total FMVSS No. 210 loading is 80,064 N (18,000 pounds) [3 × 26,669 N]. This assumes that the total dynamic load on the seat from the three occupants (for the purposes of this analysis, we assumed the occupants were three 5th percentile females) is as we measured in the sled testing with two 50th percentile dummies (we assumed for this analysis that the loading from three 5th percentile females would be about the same as the loading from the two adult dummies). Assuming this three positions seat weighs 46.3 kg (102 pounds),[43] the combined FMVSS Nos. 207 and 210 loading will be 146 percent of the dynamic load [(80,064 N + 46.3 kg × 20 g × 9.81)/(2 × 30,574 N)].

Second, by assuming a 990 mm (39 inch) wide seat with two fixed lap/shoulder belts and a seat mass of 34.5 kg (76 pounds), we calculate that the combined FMVSS Nos. 207 and 210 loading is 98.4 percent of the dynamic load [(53,376 N + 34.5 kg × 20 g × 9.81)/(2 × 30,574 N)].

As these calculations have shown, depending on the number of lap/shoulder belts on the bench and the assumed occupant sizes, the addition of the FMVSS No. 207 loading to the FMVSS No. 210 loading creates a condition where the total seat loading is even higher than what might be expected to occur dynamically (as in the situation with the three small occupants) or the total seat loading matches the dynamic loading level fairly closely (latter situation with two adult occupants). Accordingly, the data indicate that the FMVSS No. 207 load is not redundant to the FMVSS No. 222 loads.

We note that, as explained below in section IX.b.6, flex-seats would tend to be in the category of bench seats that would be overloaded (first situation) since all three belted positions in the maximum occupant configuration will receive the same FMVSS No. 210 belt loading. The agency considered whether to develop a scheme by which some small school bus seats (those with 2 fixed seating positions) would be subject to the FMVSS No. 207 loading and some (those configurable to 3 seating positions) would not. We decided against this approach because it seemed to be an unnecessary complication not based on any need to assure practicability.

Finally, we have decided against Blue Bird's recommendation to exempt seats that might be mounted on the cover of a rear engine bus (davenport seats). First, we note that Blue Bird stated they were not aware such a design currently exists in small school buses. Second, the final rule will require such a seat to have lap/shoulder belt anchorages mounted on it, unless the seat satisfies the last row seat exemption discussed later in this preamble. We seek to ensure that a seat with belt anchorages attached be sufficiently robust to sustain the additional FMVSS No. 207 seat inertial loading and that a last row seat that does not have belt anchorages still be mounted to the vehicle firmly enough to stay attached under its own inertial loading.

VIII. Upgrades for Large School Buses

This final rule requires voluntarily installed seat belts on large school buses to meet performance requirements of FMVSS Nos. 208, 210, and 222 as discussed in the NPRM and this final rule. (Under current requirements, the seat belts already must meet FMVSS No. 209, ''Seat belt assemblies.'') Comments to the NPRM were overwhelmingly supportive of the objective to require voluntarily installed seat belts to meet performance requirements.

IX. Performance and Other Requirements for Vehicle Belt Systems

a. Minimum Seat Width Requirements and Calculating W and Y

In S4.1 of FMVSS No. 222, NHTSA currently considers the number of seating positions (W) on a bench seat to be the width of the bench seat in millimeters, divided by 381 and rounded to the nearest whole number. This W value is used to calculate the compartmentalization requirements for seats on all school buses and the number of lap belt only seating positions on small school buses that must meet the provisions of FMVSS Nos. 208 and 210. In the NPRM, we proposed to continue to consider W to be the number of seating positions per bench seat with optionally provided lap belts on large school buses as well as the compartmentalization requirements for all school buses, except that the divisor was proposed to be 380 (for simplicity) rather than 381.

However, for the seating positions on small school buses with required lap/shoulder belts and on large school buses with optional lap/shoulder belts, we proposed to define the number of seating positions (using ''Y'') in a slightly different way. Y is the total seat width in millimeters divided by 380, rounded down to the nearest whole number. Under the definitions of W and the proposed definition of Y, a 1,118 mm (44 inch) wide seat would have W = 3 seating positions for the purposes of calculating the magnitude of the compartmentalization requirements to apply to the seat back, but only Y = 2 seating positions for determining the lap/shoulder belts installed on the seat.[44] The result of this ''Y'' calculation would be that each passenger seating position in a school bus seat with a lap/shoulder belt would have a minimum seating width of 380 mm (15 inches). In addition, the NPRM also proposed to adopt a requirement in FMVSS No. 222 (at S5.1.7) that each passenger seating position with a Type 2 (lap/shoulder) restraint system shall have a minimum seating width of 380 mm (15 inches). We proposed a minimum seating position width of 380 mm (15 inches) for seats with lap/shoulder belts because we sought to ensure that lap/shoulder belt anchorages are not installed so narrowly spaced that they would only fit the smallest occupants.

A new school bus seat belt technology has emerged in the marketplace involving 990 mm (39 inch) bench school bus seats with lap/shoulder belts that have flexible configurations (flex-seats). These flex-seats have lap/shoulder belts that can be adjusted to provide two lap/shoulder belts for two full average-size high school students or three lap/shoulder belts for three elementary school students. Takata and its partner, M2K LLC (M2K), and IMMI both produce these bench seats with flexible occupancy seat designs. In its minimum occupancy configurations, two 50th percentile male occupants can be accommodated per bench. In its maximum occupancy configuration, three 6- to 10-year-old children can be accommodated per bench. In comments to the NPRM, many commenters (pupil transportation providers, state and local districts, schools, individuals, advocacy groups) urged NHTSA to permit these flexible occupancy seats in the final rule.

In comments, IMMI, Takata, M2K, and Concepts stated that while they supported the NPRM, the provision that each seating position with a lap/shoulder belt have a minimum width of 15 inches is design restrictive, would reduce bus capacity, and would discourage installation of lap/shoulder belts. IMMI, Takata, and Concepts specifically recommended a minimum seat width of 330 mm (13 inches). The 330 mm (13 inch) minimum seat will permit the flexible occupancy seats that

[43] This is the value Blue Bird used in its comments for a 1,143 mm (45 inch) wide seat bench.

[44] ''Y'' would also be used to determine the loads to be applied to the shoulder belts for the quasi-static test, discussed below in this preamble. See also paragraphs S5.1.6.5.5(a) and (b) of the proposed regulatory text.

IMMI and Takata manufacture. Other commenters, including Thomas, NTEA/MCSSB, and IC Corp. (IC) also asked that the value be reduced to 330 mm (13 inches). Thomas and NTEA/MCSSB also asked that W be used for lap/shoulder seating positions rather than Y. They also suggested that the divisor be 380 rather than 381 and that the result be rounded up instead of down.

Other commenters wrote in favor of the 380 mm (15 inch) (or wider) seat. Blue Bird, CEW and AmSafe Commercial Products (AmSafe) agreed that 380 mm (15 inches) is the appropriate seat width value. Blue Bird believed that since children are getting larger, smaller minimum spacing is not in their best interest. Freedman Seating Company (Freedman) stated that the minimum seat width should be increased to 16 inches. AmSafe stated that if three 330 mm (13 inch) positions were allowed on a 990 mm (39 inch) bench seat, three average adult males could attempt to use the seat, resulting in a dangerous situation if there were a crash.

Agency Response

When we proposed that each seating position with a lap/shoulder belt have a minimum width of 380 mm (15 inches), our stated concern was that manufacturers not be allowed to install lap/shoulder belts in such a narrow space that only the smallest occupants would fit. We also acknowledged that a bench seat with 380 mm (15 inches) of width per lap/shoulder belt position would not accommodate occupants larger than a 5th percentile female simultaneously in every position. When developing the NPRM, the flex-seat designs had not yet reached the marketplace so the design restrictiveness of an absolute 380 mm (15 inch) seat width requirement was not fully recognized by the agency during the NPRM stage.

1. Flex-Seats

The comments and presentations to the agency since the NPRM have had us reconsider the proposed requirement for a 380 mm (15 inch) minimum seat width and whether design flexibility could be accommodated while assuring that seats will be wide enough for real world use by full size high school students. We agree with the majority of those commenting on the issue that flex-seats should be permitted as an option for school transportation providers wishing to implement lap/shoulder belts. Depending on the size mix of occupants being transported, flex-seats could be helpful in maximizing the occupancy rate of school buses.

The commenters opposing the reduction of the 380 mm (15 inches) minimum width per lap/shoulder belted position indicated that 330 mm (13 inches) is too small even for smaller children. They also indicated their concern that if narrower positions were allowed, adult size occupants might try to fit in them, potentially resulting in dangerous situations.

It may be true that today's children are larger than children in the past, and that would argue against reducing the 380 mm (15 inches) specification for fixed width lap/shoulder belted positions. However, we do not believe it justifies prohibiting flex-seats since they are designed to accommodate occupants needing seat widths from 330 to 495 mm (13 to 19.5 inches). We agree that there is a risk that a 330 mm (13 inches) seating position on a flex-seat in a maximum occupancy configuration may be misused by a person too large for the seat (one who should have sat in a flex-seat in a minimum occupancy configuration), but such misuse could be reduced through student training.

To provide more design flexibility in FMVSS No. 222 and to accommodate flex-seats, this final rule specifies that one lap/shoulder belt may be installed for every 330 (13 inches) of seat bench width, provided that the lap/shoulder belt seat can be reconfigured to have seating positions for every 380 mm (15 inches) of seat bench width. This ability for the seat bench width to be adjusted is specified because, as stated in the preamble of the NPRM, we continue to believe there is merit in limiting a manufacturer's ability to install too many fixed position lap/shoulder seat belts on a bench seat that accommodates only the smallest occupants.

2. Using W and Rounding Up

Both Thomas and NTEA/MCSSB indicated that the number of lap/shoulder belt seating positions should be W instead of Y. They also commented that after dividing the bench width by 380, the result should be rounded up to the next integer. NHTSA disagrees with these comments. Under the commenters' suggested methodology, a 759 mm (29.9 inches) wide bench seat could have 3 lap/shoulder belts, with each position providing 253 mm (10 inches) of seat width. We decline to adopt this suggestion for the same reason we reject the idea of a fixed 330 mm (13 inches) seat, i.e., manufacturers should not be permitted to install fixed position lap/shoulder seat belts on a bench seat that accommodates only the smallest occupants. In addition, a bench with 253 mm (10 inches) wide seating positions cannot accommodate 6-year-old occupants in every seating position.

3. Definitions

In this final rule, we are changing the seat width specification and making other necessary changes to the regulatory text modifications to permit flex-seats. To clarify the reduction in seat width and its restriction to flex-seats, we are adding new definitions to FMVSS No. 222, as follows:

Fixed occupancy seat means a bench seat equipped with Type 2 seat belts that has a permanent configuration regarding the number of seating positions on the seat. The number of seating positions on the bench seat cannot be increased or decreased.

Flexible occupancy seat means a bench seat equipped with Type 2 seat belts that can be reconfigured so that the number of seating positions on the seat varies based on occupant size. The seat has a minimum occupancy configuration for larger occupants and maximum occupancy configuration for smaller occupants, and the number of passengers capable of being carried in the minimum occupancy configuration must differ from the number of passengers capable of being carried in the maximum occupancy configuration.

Maximum occupancy configuration means, on a bench seat equipped with Type 2 seat belts, an arrangement whereby the lap belt portion of the Type 2 seat belts is such that the maximum number of occupants can be belted.

Minimum occupancy configuration means, on a bench seat equipped with Type 2 seat belts, an arrangement whereby the lap belt portion of the Type 2 seat belts is such that the minimum number of occupants can be belted.

Under these definitions, a traditional bench seat is a ''fixed occupancy seat.'' Flex-seats (which are flexible occupancy seats) must have both a maximum and minimum occupancy configuration. These definitions by themselves do not detail the numbers of occupants (W or Y) allowed in these configurations. Instead, that specification is conveyed in S4.1(c) and (d) of FMVSS No. 222, specified by this final rule.

Section S4.1(c) states that the number of fixed lap/shoulder seat belt positions per bench must be Y, essentially the same as that proposed in the NPRM. S4.1(c) also states that a flexible occupancy seat configured to hold the minimum number of occupants must also have Y lap/shoulder belt positions. Therefore, a 39-inch wide bench seat will either have 2 [rounded down from (990/380)] lap/shoulder belts or will be configurable to have 2. This assures that a seat belt equipped bench provides a

sufficient number of seating positions (Y) to accommodate the number of larger students that might be seated there.

Section S4.1(d) requires that when a flexible occupancy seat is configured to hold the maximum number of occupants, it must have Y + 1 lap/shoulder belted positions. However, the minimum allowed bench seat width must be no less than (Y + 1) × 330 mm (13 inches). As an example, a 990 mm (39 inches) flexible occupancy seat may have 3 lap/shoulder belts, of seat widths of 330 mm (13 inches), as long as the seat can be reconfigured to have 2 lap/shoulder belts of seat widths of at least 380 mm (15 inches). For this example, the 2 lap/shoulder belt seating positions would each be 445 mm (19.5 inches) wide.

Since proposed S5.1.7 is no longer needed because the minimum seat belt width requirement for older children is now specified in S4.1(c) and (d), proposed S5.1.7 is not adopted by this final rule.

b. Seat Belt Anchorages (FMVSS No. 210)

NHTSA proposed that requirements be added to FMVSS No. 210 that would ensure that the seat belt anchorages on school bus seats be designed so that the belt system will properly fit the range of children on a school bus: the average 6-year-old (represented by the Hybrid III 6-year-old child dummy (45 inches tall/52 pounds)); the average 12-year-old (represented by the Hybrid III 5th percentile female dummy (59 inches/108 pounds)); and the large high school student (represented by the 50th percentile adult male dummy (69 inches/172 pounds)). Proper seat belt fit prevents injury and helps ensure that the system performs properly in a crash. If the lap/shoulder seat belts did not fit the child occupant properly, there is an increased likelihood that the child would misuse the lap/shoulder belt system by placing the shoulder portion under the arm or behind the back. NHTSA's school bus research results showed that when the shoulder belt was placed behind the back, the restraint system functioned like a lap belt. Lap belts produced a higher risk of neck injury in the testing program when evaluated in a simulated severe frontal crash. Further, a torso belt anchorage located below the top of the shoulder may increase the spinal compression loading in a crash, increase the risk of the occupant sliding under the belt in a crash, and increase the risk of spinal and abdominal injuries.

1. Height of the Torso Belt Anchorage

We proposed that school bus seats with lap/shoulder belts have a minimum shoulder belt adjustment range between 280 mm (11 inches) and 520 mm (20.5 inches) above the SgRP (which was the location of the school bus torso belt anchor point), to ensure that the shoulder belt will fit passengers ranging in size from a 6-year-old child to a 50th percentile adult male. We proposed a definition of ''school bus torso belt adjusted height'' in FMVSS No. 210 as an objective means of determining the adjustment height. We also proposed regulatory text for FMVSS No. 208 to specify belt fit and performance characteristics for lap/shoulder belts on school bus bench seats. Specifically, we proposed to amend S7.1.5 [45] to assure that the belts fit a 50th percentile 6-year-old to a 50th percentile male.

Five commenters (AmSafe, Blue Bird, CEW, IMMI and Takata) addressed the minimum distance above the SgRP for the torso belt anchor point, 520 mm (20.5 inches), and the distance above the SgRP for the lowest point on the adjustment range of the torso belt, 280 mm (11 inches). CEW, AmSafe and Blue Bird supported the proposed minimum torso anchor point height proposal. AmSafe expressed concern that a lower torso anchor point could be dangerous to the average adult male because of potential spinal compression during a crash.

IMMI commented that in order to allow the flexible occupancy seats, changes would be necessary to FMVSS Nos. 208, 209, and 210. It stated that the 520 mm (20.5 inches) minimum anchor point height in FMVSS No. 210 would need to be reduced to 394 mm (15.5 inches) so that the ''flexible configuration cannot be used by three large students.'' It believed 394 mm (15.5 inches) would accommodate a 10-year-old child. IMMI suggested that the minimum torso anchor point for the center seating position of a flex-seat be located in a range between 387 and 400 mm (15.2 to 15.7 inches) above the SgRP.

Takata's comments suggested several alternatives to the torso belt adjustment range and the torso anchor point minimum height. One Takata-suggested alternative was to place various anthropomorphic test dummies (ATDs) (6-year-old, 10-year-old, 5th percentile female and 50th percentile male) in belted seating positions and then determine whether proper belt fit could be achieved. Takata also made proposals specific to flex-seats. One of these was to specifically not require a 330 mm (13 inches) wide seating position to accommodate a 50th percentile male. Another was to specifically allow the torso belt anchor point to be a minimum of 380 mm (15 inches) from the SgRP for the center seating position of a flex-seat, rather than 520 mm (20.5 inches) proposed in the NPRM.

Agency Response

The Takata seat design described in comments to the NPRM (hereafter referred to as the original Takata design or seat) differs from the IMMI and CEW designs in that the torso anchor point itself is adjustable rather than just the torso belt.[46] Therefore, the proposed language in S4.1.3.2 of FMVSS No. 210 would effectively disallow these designs because the minimum anchor point is much less than 520 mm, even for the outside seating positions.

Since the original Takata design was not known to the agency until after the NPRM was drafted, we did not consider in the NPRM stage the use of adjustable anchorages to achieve the desired torso belt adjustment range. After considering the comments to the NPRM, we believe it would be appropriate to have a minimum anchorage height specification for a fixed anchorage and an achievable position for an adjustable anchorage. For the reasons discussed in the NPRM, for fixed anchorages, the anchorage must be a minimum of 520 mm (20.5 in) above the SgRP. A fixed point above 520 mm (20.5 inches) would be acceptable. An adjustable anchorage may have a lower position of adjustment as long as this minimum distance from the SgRP (520 mm) can be achieved.

We are adopting a different requirement for the torso anchor for the

[45] The NPRM at S7.1.5 of the proposed regulatory text for FMVSS No. 208 (72 FR at 65527) proposed that the seat belt assembly has to operate by means of an emergency-locking retractor (ELR) or an automatic-locking retractor (ALR). In this final rule, we have removed the allowance for ALRs. No current lap/shoulder seat belts on school bus seats utilize ALRs and there is no clear indication that ALRs would provide any performance or comfort benefits compared to emergency locking retractor (ELR) equipped lap/shoulder belts. This will not preclude manufacturers from providing convertible ELRs, i.e., ALR/ELR type belts, just those that function solely as ALRs. In addition, any lap/shoulder belts in large or small school buses must still have to meet S7.1.1.5 of FMVSS No. 208, which specifies the lockability of belts. (The lockability feature facilitates the installation of child restraints using the belt system.) This is currently the situation for small school buses with lap/shoulder belts, and was proposed and now made final by this rulemaking for large school buses.

[46] A more recent Takata design, tested after the NPRM was published, had fixed torso belt anchorages in all three seating positions. Torso belt adjustment was achieved by an adjustment device sliding on a separate length of webbing.

center seating position of flex-seats that is designed for elementary school passengers only. (Elsewhere in this preamble we explain that the standard will refer to this position as a ''small occupant seating position'' and will define the term.) IMMI stated that the torso anchor for this small occupant seating position was lowered in their design to reduce the likelihood that large occupants would sit there. The lowered torso anchor would act as a disincentive to overcrowd the flex-seat. We agree that design disincentives to overcrowding the flex-seat are desirable. A lower anchor point for the center seat of a flex-seat in its maximum occupancy (3-seating position) configuration may serve as a visual cue that only a small occupant should be located in the center position. (In addition, as also discussed later in this preamble, we are requiring the torso belt of a small occupant seating position to be labeled: ''Do Not Sit In Middle Seat If Over Age 10.'' This label is to further discourage full size occupants from using the center seating position if it has a lower torso anchorage point.)

As to what the minimum height should be for that position, IMMI suggested that the minimum torso anchor point height should be lowered to a range between 387 and 400 mm (15.2 and 15.7 inches) above the SgRP. Takata requested a minimum torso anchor point of 380 mm (15 inches). We have decided to reduce the value for the minimum allowable anchor point height for the center seating position in a flexible occupancy seat to 400 mm (15.7 inches), which was the upper limit of IMMI's suggestion. We have chosen 400 mm (15.7 inches) over 380 mm (15 inches) because the higher value places the anchorage higher on the seat vis-à-vis the child's shoulder, thus reducing the likelihood of spinal compression loading in a crash. According to the anthropometric data submitted by Takata, the anchor point will be above the shoulder of an average 10-year-old occupant by at least 37 mm (1.5 inches).[47] Since the required labeling suggests that a 10-year-old can be accommodated by such a seating position, we believe it is reasonable to exceed the 10-year-old shoulder height by this value to assure the vast majority of 10-year-olds would be accommodated.

2. Anchorage Adjustability

CEW, AmSafe, and Blue Bird supported the torso belt adjustment range to ensure that lap/shoulder belts fit all passengers from an adult.

IMMI believed that a center seating position in a flexible occupancy seat that adjusts from 280 to 394 mm (11 to 15.5 inches) above the SgRP would accommodate occupants from a 6-year-old to a 10-year-old and be configured so that larger occupants would not use it. Takata suggested that instead of the adjustment range proposed in the NPRM, NHTSA could place various anthropomorphic test dummies (ATDs) (6-year-old, 10-year-old, 5th percentile female and 50th percentile male) in belted seating positions to determination whether proper belt fit could be achieved. Alternatively, the commenter suggested, NHTSA could specifically not require a 330 mm (13 inch) wide seating position to accommodate a 50th percentile male.

[47] It was necessary to add specifications in FMVSS No. 208 that provides the weight and dimensions for a 10-year-old occupant. In addition, this final rule specifies that lap/shoulder belts at a SOSP need only restrain an occupant up to the size of an average 10-year-old child.

Agency Response

For the reasons provided in the NPRM, we have decided to maintain the adjustment range proposed for torso belts in the NPRM.

Takata's comments indicate that they believe their original design would properly fit occupants down to the size of a 6-year-old child even though it does not adjust down to 280 mm (11 inches) above the SgRP. We believe that maintaining torso belt adjustability is an objective way of ensuring that lap/shoulder belts will fit even the smallest school bus riders. In the past, the agency has reviewed belt fit devices in order to determine an objective fit criterion for children riding in child restraint systems and booster seats in automobiles, but has been unsuccessful.[48] Therefore, we have produced guidelines for caregivers to use to keep the torso belt off the neck and upper abdomen.[49] We believe that the minimum seat width and anchor spacing, along with the general design constraints, will provide sufficient belt fit without establishing additional ''belt fit'' requirements with test dummies. The adjustment range proposed for torso belts is practicable, objective and clear, and all other commenters on this issue agreed that adjustment to the 280 mm (11 inches) level is appropriate to address the full range of potential occupants.

The location of the anchorage is shown below in Figure 1.

BILLING CODE 4910–59–P

[48] 70 FR 51720, 51722–51728 (August 31, 2005; Docket No. NHTSA–2005–21245). See also 69 FR 13503, (March 23, 2004; Docket NHTSA–99–5100).

[49] See, e.g., tip #3 of Transportation Safety Tips for Children *http://www.nhtsa.dot.gov/people/injury/childps/newtips/index.htm*. ''The lap belt must fit low and tight across the upper thighs. The shoulder belt should rest over the center of the shoulder and across the chest.''

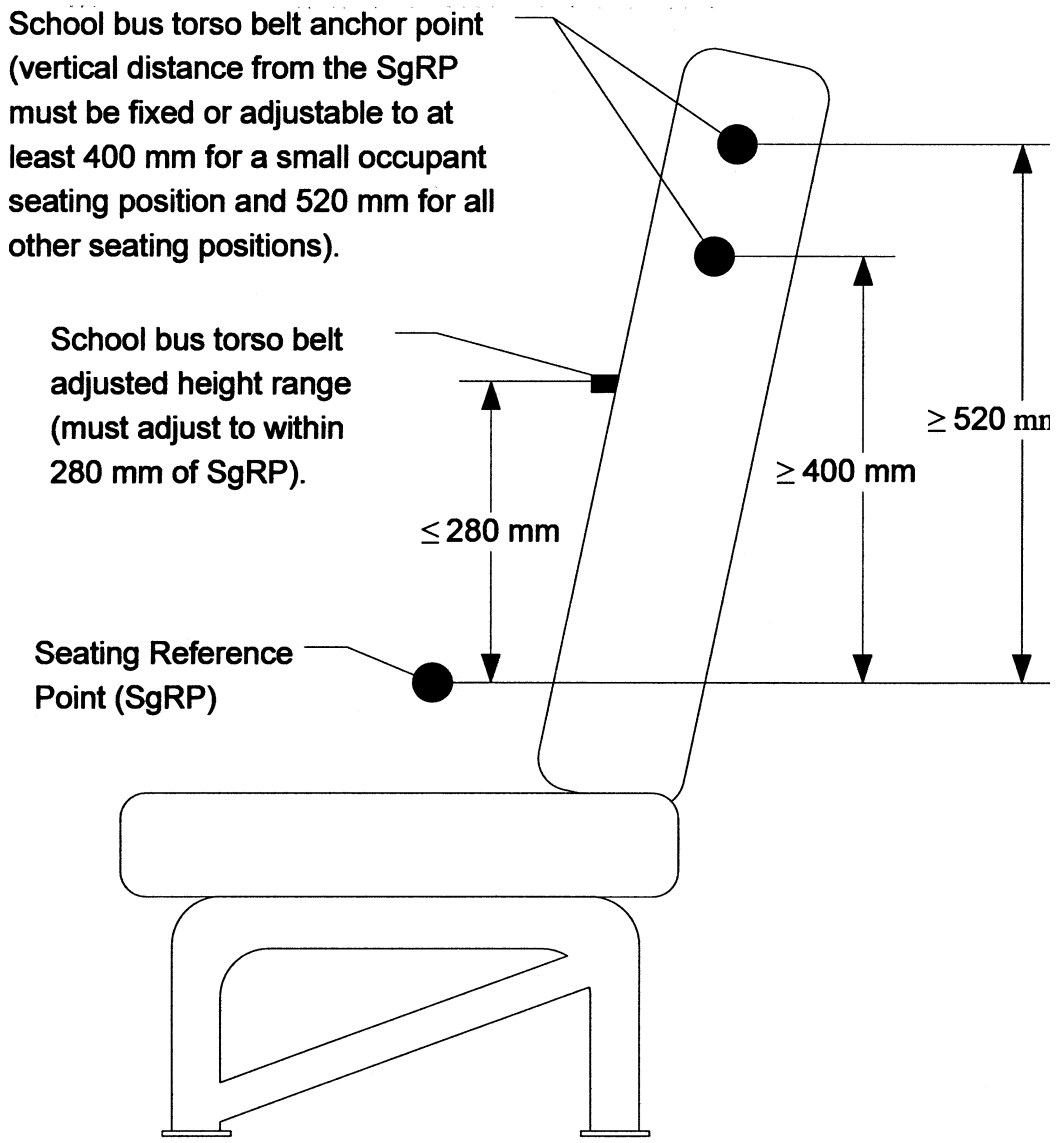

Figure 1—Seat belt anchorage diagram

3. Clarifications of Torso Anchorage Location

i. Blue Bird asked if the reference to ''more than 10 degrees from the horizontal plane'' in the proposed definition of ''school bus torso belt adjusted height'' in S3 of FMVSS No. 210 was meant to state ''from the vertical plane.'' The answer is no. We believe that the commenter may have misunderstood the definition and the concept behind it. This definition was added to FMVSS No. 210 to provide an objective means of determining the height position of the torso belt. Fundamental to the concept of correct positioning of a torso belt is that the anchorage not be below the shoulder, which could result in compressive loads on the spine in a frontal crash. The horizontal plane is relevant to see where the torso belt anchorage is located relative to the top of the shoulder.

However, because the definition was unclear to the commenter, we have decided to add a small clarification to the definition to specify that the height is measured from the SgRP.

ii. Takata also stated that in addition to vertical position, the lateral position of the torso belt relative to the midsagittal plane is also important. We agree with Takata that lateral position of the torso anchor point will also influence belt fit. However, the agency will leave this parameter to the discretion of the manufacturer so it might be optimized in the context of the required vertical adjustment range.

4. Integration of the Seat Belt Anchorages Into the Seat Structure

The NPRM proposed that the seat belt anchorages, both torso and lap, be required to be integrated into the seat structure. This proposal was made because we were concerned that if we did not, some manufacturers could incorporate seat belt anchorages into other structures in the school bus, potentially injuring unbelted school bus passengers in a crash, or obstructing passengers during emergency egress. We also requested comment on whether there were anchorage designs, other than those integrated into the seat back, that would not impede emergency evacuation or potentially cause injury to unbelted passengers.

In its comments, CEW stated that it was ''not aware of a seat belt anchor design (other than being integrated into the structure of the seat) that would not impede access/egress to an emergency exit or become a source of injury or hazard.'' IMMI agreed with the requirement proposed in the NPRM that seat belt anchors be integrated into the seat structure for most seats, but requested an exception for the last row of ''Type D'' school buses. Their rationale for the exemption was:

> The seats in such a row are integral with the vehicle body structure and most commonly, the torso restraint retractors at such seats are mounted into the bus body structure, and the shoulder belts are routed over the upper edge or through the seat back. The lap belt anchorages are also incorporated into the lower structure of the davenport. This design helps bus manufacturers minimize seat back thickness in order to optimize seat spacing for maximizing capacity. And restraints mounted in this manner can not impede access to emergency exits or become an injury hazard to unbelted passengers.

In opposition to the proposal were Thomas, IC, NTEA/MCSSB, and Girardin, which stated that seat belt anchorages, at least for certain bus types or seat positions, do not need to be integrated into the seat structure. Alternatively, Thomas requested that ''anchorages integrated into the bus body structure be permitted in the last seating row'' for all bus sizes.

Thomas and NTEA/MCSSB both commented that seat belts should not be required to be integrated into the seat structure for small school buses. They stated that some anchorages could be installed on the bus floor, sidewall, or roof, and stated that ''[t]hese installations could be optionally configured or designed so that they do not impede access to emergency exits.'' Girardin, a small school bus manufacturer, stated: ''Anchorages provided in the side wall or in the rear structure can be achieved without obstructing passenger exit and could also help to reduce the deflection of the rear seats in the row against the rear wall.''

Agency Response

We agree not to adopt the requirement for the last row, but since the commenters have not provided any information on vehicle mounted belt anchorage designs other than for the last row, we were unable to assess the safety and effectiveness of bus-mounted anchorage systems in general. In addition, the commenters did not address our other concern about whether ''non-integrated'' seat belts could be safety hazards for unbelted occupants in a crash. Therefore, in this final rule, we will not reject the requirement in its entirety for all school buses.

Based on comments received on this issue, the last row is excluded from the requirement because our concern about emergency exit access is lessened for the last row of seats. The last row of seats in conventional large school buses and small school buses typically has two seats with a 610 mm (24 inch) aisle (large buses) or 559 mm (22 inch) aisle (small buses) between them, to provide access to the rear emergency exit door. FMVSS No. 217 imposes requirements for unobstructed passage through the door. Thus, at least in the immediate vicinity of the door, that standard should prevent seat belts from being installed in such a way that could impede access to the emergency exit.[50] We also believe that the location and style of the last row seats in these buses make it possible to place belt anchorages behind or to the side of the seat, where the belt webbing would not impede safe travel in and out of the seat. Thus, if these belts are out of the way of the students, they are unlikely to pose risks of injury to unbelted students in a crash (e.g., a student could become entangled in belt webbing). This is not the case for all bus seats, where belts for inboard seat positions in particular could be mounted such that the belt webbing could impede safe passage through the bus interior or pose an injury risk for unbelted students in a crash.

There are rear-engine buses with a rear emergency exit window instead of a door. Regardless of the type of emergency exit there is in the bus (door or push-out rear window[51]), we emphasize the importance of keeping the area of the rear emergency exit free from seat belt webbing so that emergency egress is not impeded. We will monitor anchorage designs in this subset of vehicles to ensure that safety is not compromised. With regard to small school buses, several commenters (Thomas, Girardin, and NTEA/MCSSB) indicated that in these vehicles, anchorages could be placed such that they do not interfere with emergency exits. However, the commenters did not address the other agency concern with whether ''non-integrated'' seat belts could be safety hazards for unbelted occupants in a crash. In addition, no data or specific information about anchorage designs were provided to enable us to make a determination as to whether the belts could be injurious to unbelted passengers. Therefore, in this final rule, we will not exempt small school buses generally from the requirement that seat belt anchorages be integrated into the seat structure, except for the last row of seats as discussed in the previous paragraph.

5. Minimum Lateral Anchorage Separation

The NPRM proposed to adopt a requirement in FMVSS No. 222 (S5.1.7) that each passenger seating position with a lap/shoulder restraint system shall have a minimum seat belt anchor width of 380 mm (15 inches) (and a minimum seating width of 380 mm (15 inches)). At the same time, the NPRM proposed to amend the application section of FMVSS No. 210 so that it expressly applied to school buses, and thus proposed to extend S4.3.1.4 of FMVSS No. 210 to school buses. S4.3.1.4 states: ''Anchorages for an individual seat belt assembly shall be located at least 165 mm [(6.5 inch)] apart laterally, measured between the vertical center line of the bolt holes or, for designs using other means of attachment to the vehicle structure, between the centroid of such means.''

We have realized that the 380 mm (15 inches) anchorage minimum lateral spacing requirement proposed for FMVSS No. 222 is inconsistent with the proposed FMVSS No. 210 requirement that all belts on school bus seats must be attached to the seat structure. Assuming that the anchorage lateral spacing is to be measured in a manner consistent with proposed S4.3.1.4 of

[50] The requirement for a large school bus emergency exit door opening is found in 49 CFR 571.217 S5.4.2.1(a)(1).

[51] Emergency exit windows in a school bus must provide an opening large enough to admit unobstructed passage of an ellipsoid generated by rotating about its minor axis an ellipse with major axis of 50 cm and minor axis of 33 cm, as given in FMVSS No. 217, S5.4.2.1(c).

FMVSS No. 210 and the belted seating position width were 380 mm (15 inches), it would be very difficult to have a 380 mm (15 inches) anchorage lateral spacing without extending the seat structure beyond the width of the seat cushion.[52]

Since it seems very unlikely for the anchorage minimum allowed lateral spacing to be equal to the seating position width for designs with the minimum allowed seating position width, in this final rule, we have decided that the seat belt anchorage of school bus seats must be less than the proposed value. For example, as proposed in the NPRM, a 1,143 mm (45 inch) wide bench seat could have lap/shoulder equipped seating positions, each with a 380 mm (15 inch) seat width. At the same time, each lower anchorage for those seating positions would have needed a 380 mm (15 inch) lateral separation. Therefore, the physical width of the seat structure makes it difficult to achieve this anchorage separation. Thus, we will specify spacing of less than 380 mm (15 inches) that is consistent with the minimum seating position width, but takes into consideration the physical limitation of the space available on the seat structure. (As explained below, we are specifying 330 mm (13 inches) for fixed positions or flex-seat position in the minimum occupancy configuration (both of these must have at least a 380 mm (15 inch) seat widths) and 280 mm (11 inches) for flex-seats in maximum occupancy configuration (this must have at least a 330 mm (13 inch) seat width).) This value must be achieved at all seating positions simultaneously, which is important for flex-seat designs that have a sliding anchorage, like the IMMI design. The specification for ''simultaneous'' specification is important for sliding anchorages to assure that when multiple occupants are seated on the bench, each occupant's belt has an acceptable separation.

We continue to believe that a minimum anchorage lateral spacing should be specified to provide better pelvic load distribution for frontal impacts than narrow spacing. If anchorages are narrower than the occupant pelvis, the belts can wrap around the iliac crests and cause compressive loading. This may be even more undesirable when the lap portion of the belt is poorly positioned such that it loads the abdominal region.

To determine the appropriate value for lateral anchorage separation, we measured the lower anchorage space of several flex-seats with nominal total bench widths of 990 mm (39 inches).[53] [54] Based on these data, we believe that flexible occupancy seat designs in a maximum occupancy configuration (Y + 1 seating positions with lap/shoulder belts) should be able to achieve a lateral separation of the lower anchorages of no less than 280 mm (11.0 inches) simultaneously in any seating position. We found that the IMMI seat is well above this value. We believe the Takata seat can be easily altered to meet this requirement. Similarly, any non-flex-seat or a flex-seat in a minimum occupancy configuration (Y seating positions with lap/shoulder belts) should be able to achieve a lateral separation of the lower anchorages of no less than 330 mm (13.0 inches) simultaneously in any seating position.

Since this lateral separation need only be achievable, it is acceptable that the sliding buckle anchorage for the IMMI flex-seat allows the left or center seat anchorage separation to be independently less than 280 mm (11.0 inches). One reason we are not unduly concerned with sliding anchorages as they relate to the issue of the lateral distance between anchorages is because we believe that such a design will be self-centering. In other words, the only time the anchorage separation would likely to be less than 280 mm (11.0 inches) would be when an occupant with hips narrower than this dimension would be seated in this position. In that case, the anchor width would tend to match the occupants' hip width, which would not be problematic in terms of belt loading on the occupant. Nevertheless, to ensure that sliding or otherwise movable anchorages cannot be adjusted so close together such that they could be positioned narrower than a child occupant's pelvis in a crash, we have also retained the current FMVSS No. 210 requirement of 165 mm (6.5 inches) minimum spacing for the anchorages. Thus, movable anchorages for an occupant seating position cannot be capable of being closer than 165 mm (6.5 inches).

To summarize, this final rule reduces the lower anchorage minimum lateral spacing from the 380 mm (15 inches) value to 280 mm (11.0 inches) for flexible occupancy seats with the maximum number of occupants and 330 mm (13 inches) for all other seating positions with lap/shoulder belts. We note that these must be minimum distances simultaneously achievable by all seating positions. This is necessary because it would be very difficult to have a 380 mm (15 inches) anchorage lateral spacing without extending the seat structure beyond the width of the seat cushion. The value selected is practicable, based on measurements of existing designs. Further, under FMVSS No. 210, movable (e.g., sliding) anchorages for an occupant seating position cannot be capable of being closer than 165 mm (6.5 inches).

Given space is available, we continue to believe there is merit to requiring a wide anchorage separation in school buses so as to obtain good load distributions.

6. Anchorage Strength

The agency proposed that for large school buses with voluntarily installed lap belts or lap/shoulder seat belts, the FMVSS No. 210 anchorage strength requirement be identical to the requirements for passenger seat belt anchorages in smaller vehicles, i.e., 22,240 N (5,000 pounds) applied to the pelvic body block for Type 1 belts and 13,334 N (3,000 pounds) applied to the torso and pelvic body blocks for Type 2 belts. We stated our recognition that anchorages in large school buses would be likely exposed to lower crash forces than would small school buses. We used measurements of seat-to-sled attachment forces in the deceleration direction to estimate that the total peak dynamic loading sustained by the seat belts in a large school bus crash pulse is about 2/3 of that applied in FMVSS No. 210.

We also requested comment on the appropriateness of the strength levels being proposed for large school buses in FMVSS No. 210. We asked how much the load could be reduced and still provide an appropriate safety margin in a variety of crash scenarios. We also sought information about the cost and weight savings associated with a lesser requirement.

There was no consensus on this issue in the comments. Many commenters supported a single FMVSS No. 210 body block load for both large and small school buses. Takata stated that ''NHTSA sled testing confirmed that current FMVSS 210 loads are *not* excessive when the seat is occupied by two 95th percentile males (such as high school football players).'' To illustrate this, they calculated that ''[e]ach 95th percentile male would impart approximately 5,114 pounds/seating position.'' M2K addressed the issue of practicability and stated that ''at least

[52] The width of each belted seating position is determined as a multiple of the seat cushion width.

[53] ''FMVSS No. 222 School Bus Seat Quasi-Static Testing for Various School Bus Seats Equipped with Type 2 Seat Belts, Test Procedure Development Testing,'' General Testing Laboratories, Inc., August 2008.

[54] ''NHTSA Technical Analysis to Support the Final Rule Upgrading Passenger Crash Protection in School Buses,'' September 2008.

two school bus seat manufacturers seem to be fulfilling current strength requirements; and reducing these strength requirements would seem counter-productive to stated goals of the NPRM.'' Concepts stated that it was logical to apply the current FMVSS No. 210 loads to all school bus seats since it applies to all other vehicle types. Concepts also stated: ''We must question the need for, and express strong opposition to, any proposed reductions in strength required for seat backs, seat belt anchorages, or seat-to-floor attachment points.'' CEW stated that they actually test beyond the FMVSS No. 210 limit; in some cases as high as 32,000 N (7,200 pounds) per seating position. CEW stated its belief that ''any cost saving by lowering the large bus FMVSS No. 210 strength levels would most likely be off-set by a corresponding cost increase by having two different seats, one for the small bus and one for the large bus.''

IMMI proposed a reduction for the center seating position of flexible occupancy seats. IMMI recommended that for the center seating position, a loading of 8,896 N (2,000 pounds) through the torso and pelvic blocks be applied, rather than 13,345 N (3,000 pounds). IMMI stated its belief that its suggestion was ''consistent with NHTSA's rationale for varying the loads in the quasi-static test procedure depending on whether a seat will accommodate three small or two large children.''

Blue Bird stated that it would be appropriate to reduce the load on lap/shoulder belts of large school buses by ⅓ (apply 8,896 N (2000 pounds) each on the torso and lap body blocks). They also recommended a lap body block value of 17,500 N (3,934 pounds) for lap belt only systems, taken directly from NHTSA calculations of per seating position loading. IC stated that the belt load should—

> be changed to ⅔ of the small bus requirement for both Type 1 and Type 2 restraint systems. While it may be desirable and cost effective in some cases to use the same design for both small and large school buses, that certainly is not always the case and that should not dictate establishing the performance requirement for large buses at a level higher than necessary * * * * In essence, setting the performance requirement at a level higher than necessary could ultimately reduce the number of children riding on school buses.

NYAPT stated that ''[a]bsent any *bona fide* testing results and research-based data to the contrary, we would recommend against establishing any differential standards among school buses.''

Agency Response

In this final rule we will not reduce the loading for either large school buses or for any seating position of a flexible occupancy seat, including the small occupant seating position (center position with a reduced anchor point height). We specify one anchorage strength requirement (i.e., 13,334 N (3,000 pounds) applied to the torso and pelvic body blocks) for both large and small school buses with Type 2 seat belts. Based on data from the post-NPRM testing,[55] [56] the assumption that the large school bus pulse generates about 67 percent of the FMVSS No. 210 force still appears to be valid, assuming two belted seating positions. Assuming three belted positions, the same peak dynamic load generates 44 percent of the FMVSS No. 210 force.[57]

As discussed elsewhere in this preamble, the agency has chosen a tiered approach to the quasi-static loading as an acknowledgement that large and small school buses have different crash characteristics. Nevertheless, in this final rule, we are keeping a single requirement in FMVSS No. 210, equal to the more severe small school bus case. One of the main reasons is a unified FMVSS No. 210 requirement provides a safety margin and facilitates better efficiency in the testing.

NHTSA's testing and the comments from school bus seat manufacturers lead us to believe that it is not difficult to sustain the loads traditionally required by FMVSS No. 210, given that there is no displacement limit in FMVSS No. 210. This is not true of the quasi-static test, where we do recognize the multiple force/displacement and energy criteria that school bus seats must meet supports our decision not to require a single quasi-static requirement for all school bus seats. With the FMVSS No. 210 loading, one requirement for all school bus seats meets the need for safety without being unduly burdensome.

Another fundamental difference between the tiered loading level approach the agency has taken in the quasi-static test and a single level of stringency we are specifying to meet FMVSS No. 210 requirements is that the anchorage strength provides the foundation upon which the restraint system is built. There is a more vital safety need to require the anchorages to meet the more stringent FMVSS No. 210 requirement. In addition, having the safety margin better ensures that the anchorages will be strong enough to deal with loading in excess of what is anticipated, either because of use or misuse by larger occupants, the stiffness and mass of the vehicle (e.g., vehicles closer in mass to a small bus than the large school bus will experience a more severe crash pulse), or because of the nature of the particular school bus crash. Further, commenters did not provide cost and weight data showing as to the cost savings, if any, that would result from a reduced loading for a larger class of school buses. Accordingly, a 13,334 N (3,000 pounds) load will be applied to the torso and pelvic body blocks for both large and small school buses with Type 2 seat belts. Similarly, we continue to specify a pelvic body block force of 22,240 N (5,000 pounds) for optionally provided Type 1 seat belts on large school buses.

c. Quasi-Static Test for Lap/Shoulder Belts on All School Buses

I. Quasi-Static Test Requirement

The agency proposed school buses with lap/shoulder belts must meet a quasi-static test procedure that was developed by NHTSA to address possible safety problems caused by having both belted and unbelted passengers on the same school bus. (The quasi-static test requirements would be in addition to existing compartmentalization requirements for seat performance). (72 FR at 65521)

School bus seats designed to provide compartmentalized protection must contain the child between well-padded seat backs that provide controlled ride-down in a crash. A school bus seat with a lap/shoulder belt would have the torso (shoulder) belt attached to the seat back. In a crash involving a belted child and an unbelted child aft of the belted occupant, the seat back would be subject to consecutive force applications from the belted occupant's torso loading the seat back *and* the force generated by impact of the unbelted passenger. The quasi-static test replicates this double-loading scenario and specifies limits on how far forward the seat back may displace. The test helps ensure that the top of a seat back does not pull too far forward and jeopardize the protection of compartmentalized passengers to the rear of the belted occupants, or diminish the torso restraint effectiveness for lap/shoulder belted occupants.

[55] ''NHTSA Technical Analysis to Support the Final Rule Upgrading Passenger Crash Protection in School Buses,'' September 2008.

[56] ''NHTSA Vehicle Research and Test Center's Technical Report on Dynamic and Quasi-Static Testing for Lap/Shoulder Belts in School Buses,'' September 2008.

[57] This calculation assumes a bench seat with three fixed or flex-seating positions and that three 5th percentile female occupants would be generating the dynamic loading.

a. Background

The agency developed the quasi-static test by performing a sled test using the same large school bus crash pulse that was used in the school bus research program. We measured the loads on the shoulder belts and both lower parts of the lap belt. Two unbelted 50th percentile male dummies were positioned behind the seat that contained two restrained 50th percentile male dummies. Visual observation of seat kinematics and load cell data produced by the shoulder belts from this test revealed the following sequence of events:

1. The knees of the unbelted dummy to the rear struck the back of the forward seat, causing some seat back deflection.
2. The seat back was loaded by the shoulder belt of the restrained dummy in the forward seat.
3. The shoulder belt load was reduced as the seat back to which it was attached deflected forward.
4. The shoulder belt loads reduced to approximately zero when the unbelted dummies' chests struck the forward seat back.
5. The forward seat back deflected further forward as the energy from the unbelted dummies was absorbed.

This crash scenario is replicated in the quasi-static test. The load requirement for the quasi-static test is dependant upon the number of seating positions and also the likely seat capacity. A seat that has the minimal allowed overall seat width for either a two or three occupant seat will have a reduced loading requirement from other seats.[58]

Stage 1: Torso Belt Anchorage Displacement

The first part of the quasi-static test replicates steps 1 and 2 of the crash scenario above. The procedure uses the knee and top loading bars that are currently specified in S5.1.3 of FMVSS No. 222 (seat back strength), which replicate a passenger's knee and torso loading the forward seat back[59] and the FMVSS No. 210 upper torso body block.[60] The test procedure uses the bottom loading bar to replicate the knee loading by the unbelted rear passengers (based on W), then specifies a pull test on the shoulder belts at each seating position in the seat to replicate loading of the shoulder belt by the belted passengers (based on Y). The large school bus shoulder belts are pulled using the upper torso body block specified in Figure 3 of FMVSS No. 210 with a specified force. The NPRM proposed a force of 5,000 N (1,124 pounds) at each seating position for large school buses, and a force of 7,500 N (1,686 pounds) for small school buses.[61]

We explained in the NPRM that an applied load of 5,000 N (1,124 pounds) for large school buses appeared to be necessary to replicate the torso belt loading from the sled test and to get the similar seat response observed from high speed video. For small school buses, a higher force was proposed because the small school bus crash pulse has twice the peak acceleration of the large school bus, i.e., approximately 25 g's.[62]

At this mid-point of the quasi-static test when the torso block force is being applied, NHTSA measures whether the seat back has pulled too far forward and jeopardized the protection of compartmentalized passengers to the rear of the belted occupants or diminished the torso restraint effectiveness for the lap/shoulder belted occupant. In the NPRM, the proposed criterion for passing this part of the test was a specified limit on the forward displacement of the torso belt anchorage. The specified value was a function of the vertical location of the anchorage (AH) and the initial angle (Φ)[63] of the seat back surface that compartmentalizes the occupants rearward of the seat being tested, i.e., the posterior surface of the seat back. Basically, for large school buses, the proposed allowable displacement was equivalent to the amount of displacement that would result from the seat back deflecting forward 10 degrees past a vertical plane.[64] For large school buses, this is represented in the equation below by sin(10 deg.) = 0.174. Thus, the total allowable forward horizontal displacement for large school buses was proposed to be:

Large School Bus Displacement Limit = $(AH + 100)(\tan\Phi + 0.174\sin(10\text{ deg.})/\cos\Phi)$ mm.

For small school buses, the displacement limit was proposed to be equivalent to the amount of displacement resulting from a seat back deflecting forward 15 degrees past a vertical plane (sin(15 deg.) = 0.259). The displacement limit would be determined using the equation:

Small School Bus Displacement Limit = $(AH + 100)(\tan\Phi + 0.259\sin(15\text{ deg.})/\cos\Phi)$ mm.

The proposed allowed displacement for small school buses would be greater than the limit for large school buses to account for agency concerns about practicability of small school buses meeting the displacement criterion.

As noted above, the goal of the proposed torso belt anchorage displacement criterion was two-fold. The first goal was to assure that the seat back to which the torso belt is anchored has sufficient strength to restrain and protect the belted occupant in a frontal crash. The second goal was to assure that the seat back is still in a sufficiently upright position to compartmentalize unbelted occupants to the rear. Thus, we believed that the displacement limit should be narrow, to ensure that seat backs deviate as little as possible from the initial upright position.

Stage 2: Energy Absorption Capability of the Seat Back

The quasi-static test continues with procedures to replicate steps 3, 4 and 5 of the crash scenario above. After the torso anchorage displacement is measured, the torso body block load is released. Immediately after this load is released, forward load is applied to the seat back through the top loading bar. It was proposed that the seat back must be able to absorb the same amount of energy per seating position (452 joules (4,000 in-pounds)) as is required of a seat back under the compartmentalization requirement. However, it was proposed that for this quasi-static test, the seat back need not perform such that the top loading bar force must stay in the force/deflection corridor specified for the

[58] A school bus bench seat has the minimum allowed overall width if the total seat width in millimeters minus 380Y is 25 mm (1 inch) or less.

[59] The current knee loading test procedure requires that initially a force of 3,114 N (700 pounds) times the number of seating positions in the test seat (W) be applied to the seat back within 5 and not more than 30 seconds, and then the force is reduced to 1,557 N (350 pounds) times W. The knee loading bar is locked in this position for the remainder of the test. The current top loading test procedure requires an additional force through the top loading bar until 452 joules (4,000 inch-pounds) times W of energy is absorbed by the seat back.

[60] The agency is considering a rulemaking that would replace the torso body block in FMVSS No. 210 with an updated force application device. If the upper torso body block in FMVSS No. 210 is changed, the body block discussed in this quasi-static procedure proposed today may be changed to the new force application device as well.

[61] As discussed earlier in this section, these 5,000 N (1,124 pounds) and 7,500 N (1,686 pounds) values would be reduced depending on the width of the seat.

[62] The rationale for the load application is explained in the agency's 2007 Technical Analysis. We have verified the appropriateness of this load value through additional dynamic testing performed after the NPRM was published.

[63] We note that in the preamble of the NPRM, the initial seat back angle was mistakenly represented by θ in the displacement limit equation. However, the proposed regulatory text and the 2007 Technical Analysis correctly identified the initial seat back angle as Φ in the displacement limit equation.

[64] The derivation of the equation defining this displacement limit was explained in the agency's 2007 Technical Analysis.

compartmentalization requirement.[65] We were concerned about the practicability of meeting the force/deflection corridor, since the torso body block load may have generated stresses in the seat frame that exceed the elastic limit of the material and result in residual strain.

b. Comments and Agency Responses

School bus seat and restraint manufacturers and school bus manufacturers commented on the quasi-static test. The commenters generally concurred with the need for a test to assure the compatibility of belts and compartmentalization, and most suggested technical changes to the test. IMMI and Takata raised issues concerning implications of the proposed requirements on their seat designs.

The comments are addressed below, with the agency's responses.

i. IMMI's comments supported the agency's proposal to add the quasi-static test to assure that compartmentalization is maintained for seats with lap/shoulder belts, but was concerned that an aspect of the test procedure would ''disfavor'' its dual frame seat design. It indicated that using the torso anchor point as the reference for measuring the displacement ''is not relevant to the ability of certain school bus seating designs to provide such compartmentalization.'' This is because with IMMI's design, the outer seat back frame providing compartmentalization is not attached to the inner frame where the anchor point is located, so the seat would not meet the proposed displacement requirement. They urged the agency to change the test procedure to avoid limiting their dual frame design, which they believe to have good dynamic performance. IMMI asked that the test measure ''the rear surface of the seat back—rather than measuring the displacement of the torso anchorage, which is irrelevant to compartmentalization in this innovative seat design.''

Agency Response

NHTSA does not agree that it is a simple matter to change from the restriction on the horizontal displacement of the torso anchor point to the rear surface of the seat back. Simply placing a rotation or displacement limit on the compartmentalizing seat back would provide no limit on the forward displacement of the torso anchorage of a dual frame design such as IMMI's. If the agency were to just limit the seat back displacement/rotation, the dual frame design could offer very little resistance to forward excursion of the belted occupant while still meeting the requirement, which could in some designs provide no better protection than just a lap belt. Thus, just measuring the displacement/rotation of the seat back would not achieve our goals of protecting both the belted and rearward unbelted occupants.

However, in recognition of the merits of making our requirements as performance-oriented as possible, we have decided to limit the horizontal displacement of both the anchor point and seat back to avoid unnecessary design restrictions. As discussed in the 2008 Technical Analysis, in consideration of comments to the NPRM, the agency believes there is sufficient justification to limit the displacement of torso anchor point as well as the seat back in the final rule. This will have no substantial effect on unified frame seat designs in that the seat back displacement limit will be identical to the anchor point displacement limit in the NPRM.

Thus, the quasi-static displacement measurement will include both a seat back and a torso anchor point displacement. We have decided that the best way to do this is to measure the displacement of a point on the rear surface of the seat back, rearward of the anchor point. This seat back displacement point is found by passing a horizontal longitudinal line through the torso anchor point and determining where it intersects the seat back surface. With the seat back displacement point defined in this way, the displacement limits can be calculated. We selected this approach for determining the seat back displacement point because of its simplicity. While we acknowledge that a point on the surface of the seat back may be prone to displacement as a result of deformation of non-structural elements such as upholstery, our testing has indicated that such movement is not significant in comparison to the structural deformation of the seat back caused by torso belt loading.

We also considered measuring the displacement of other points on the seat back structure. For example, we considered removing a section of upholstery in the vicinity of the seat back displacement point described above, in order to expose a portion of the seat back frame that could be tracked. However, our examination of the structure of lap/shoulder belt equipped seat backs showed a great deal of variation in the internal structure. We felt this might lead to substantial variability in objectively identifying a point on the internal structure to track.

ii. IMMI requested that NHTSA allow additional torso anchor point displacement equivalent to 4 degrees of additional seat back rotation for both the large and small school bus requirements to accommodate its design. The commenter provided data in support of its request.

Agency Response

We have decided to grant IMMI's request. The commenter asked for torso anchor point displacement equivalent to 4 degrees of additional seat back rotation for both the large and small school bus requirements. We estimate that this will result in approximately a 40 mm increase in allowable anchor point displacement.

As explained in the 2008 Technical Analysis, IMMI presented comparative dynamic testing data in its supplemental comments on the NPRM that showed the results of tests of prototype designs of flex-seats under consideration by IMMI with 5th percentile female dummies and with the two 50th percentile male dummies. The dummies measured injury levels under the IARVs even though the seat was not capable of achieving the displacement limit with the added approximately 40 mm of displacement. IMMI informed NHTSA that it was going to redesign the flex-seat's inner frame to provide additional torso belt support. We would expect that a redesign of the dual frame seat to meet the final rule anchor point limit would have equal or better dynamic performance. In addition, our analysis indicates that anchor point displacement of a dual frame seat design will still be bound by the energy absorption phase of the quasi-static test even as greater anchor point displacement is allowed during the torso belt pull phase of the test. Also, the seat will still need to meet the energy absorption of 452 J (4,000 inch-pounds) per occupant seating position specified in S5.1.3. These parameters will still limit the reduction in strength/energy absorption capability of the inner frame.

iii. Freedman commented: ''If a seat assembly includes more than one torso belt anchor point how should the displacement be measured? Should the average or the worst case displacement be used for evaluation? FSTL recommends that NHTSA clarify the procedure to address the possibility of multiple torso belt anchor points on one seat.''

[65] A separate FMVSS No. 222 forward loading test is still performed on a different test specimen, one that was not subjected to the quasi-static test, to assure that in a crash, if the seat were not occupied by a belted passenger and it were impacted by an unbelted rearward passenger, the seat would meet the force/deflection corridor.

Agency Response

The agency will use the displacement of any of the torso belt anchorage points to determine if a seat meets the performance criteria.

iv. Freedman tested its double occupant 3PT Family Seat ''according to the parameters proposed for small school buses.'' As a result, Freedman suggested one change to proposed S5.1.6.5.7.; that ''the forward and rearward travel distance of the upper loading bar pivot attachment point measured from the position at which the initial application of 44 N of force is attained'' be changed to ''the forward and rearward travel distance of the upper loading bar pivot attachment point measured from the position at which an application of 44 N of force is attained.''

Agency Response

The agency has adjusted the performance criteria in such a way that the measurement for forward travel will start after the 44 N force is obtained.

v. CEW asked NHTSA to remove the requirement to measure the initial seat back angle. CEW believes this would be time-consuming and unnecessary if an angular rotation limit were used. CEW proposed that ''the criteria for both large and small school buses could be: Shoulder anchor displacement must be < 10 degrees forward of vertical per above quote or a linear equivalent.'' Takata also suggested the agency consider different displacement measurement methodology and limits when assessing the performance of the seat back in various stages of the quasi-static test. They specified that a displacement plane should establish the limit on seat back rotation. The primary context of this seemed to be the energy absorption criteria of the quasi-static test. However, this would also seem to limit the seat back rotation during the torso belt loading portion of the test.

Agency Response

We decline to accept the CEW or Takata suggestions. The final rule will continue to use a horizontal displacement limit for anchor point motion. The final rule will also use a horizontal displacement limit for seat back motion.

As explained in the 2007 Technical Analysis, the agency derived the torso anchor point displacement assuming rigid body rotation of the seat back about a point 100 mm below the SgRP. We understood that the actual anchor point displacement is dependent upon the seat back design. Although specific points on the seat back may rotate and translate, the seat back may actually bend like a cantilever beam under load. As CEW and Takata suggest, certainly this bending motion can be described as a change in angle of a line passing through the anchor point or upper part of the seat back and some other reference point near the seat base. However, we continue to believe that the forward displacement of the anchor point is more relevant to occupant restraint than rotation of a line passing through it. That is because a rotational measurement would not take into consideration the absolute displacement of the anchor point. While the Takata suggestion provides a displacement limiting plane in space and thus restricts absolute translation of the anchor point, we do not regard this method to be superior to the agency's proposal.

We disagree with the CEW comment that measurement of the initial seat back angle, which is necessary to calculate the displacement limit, is complicated and time consuming. We believe this to be a relatively simple measurement to make. We also do not agree with Blue Bird's suggestion to place Figure 9 from the 2007 Technical Analysis in the regulatory text, since this may imply that only rigid body rotation is occurring.

Finally, while the idea to use a rotational limit to control the seat back motion as opposed to a displacement limit has merit, we do not believe it is more merited than the displacement value of the anchor point as proposed by the agency. We also believe it would be challenging to find an objective method of measuring the seat back angle at multiple locations along the seat back as it is being deformed in a non-uniform way due to non-symmetric loading from multiple torso belts.

vi. Takata believed that the final rule should limit the displacement of the ''effective point'' or ''effective anchorage.'' This would differ from the anchor point in that it would include where the torso belt interacts with the torso belt adjustment device. Takata was concerned that the adjustment device might slip during the torso body block loading. This slippage would result in additional belt spool-out. Thus, the displacement of the anchor point would not be representative of the actual occupant displacement. Takata was also concerned that movement of the adjustment device could cause the torso belt angle to change and cause the load path to move off the shoulder. They suggested that the quasi-static procedure mark the belt webbing and limit slippage to no more than 25 mm (1.0 inch), after accounting for webbing stretch. In an *ex parte* meeting with the agency they explained that the distance between the effective point and latch plate should not increase by more than 25 mm (1.0 inch).

Agency Response

Both quasi-static and dynamic testing of seat belt designs with torso belt adjustment devices showed that the devices tended to slip when loading was applied to the torso belts. Thus, we believe that Takata's suggestion of limiting the adjuster slippage to 25 mm (1.0 inch) or less is reasonable. However, we believe that this value should be relative to the initial position on the fixed webbing upon which the adjuster travels. This avoids having to deal with or compensate for stretch in the torso restraint webbing, which would be necessary if we were to use the test method suggested by Takata.

Finally, to implement this change, the initial position of the torso belt adjustment device must be such that slippage will be possible. For example, if the starting position for the adjuster is fully up, there is nowhere for it to go, and the test will not discern the sufficiency of adjuster's capability of remaining in position. To verify that the adjuster does not slip more than 25 mm (1.0) under load, the final rule will require it to be placed 38 mm (1.5 inches) below its highest position of adjustment.

vii. The proposed quasi-static procedure applied no load through the pelvic body block. A pelvic body block was not included because the focus of the test is to assure that the top of the seat back does not pull too far forward, reducing compartmentalization, and because a visual assessment showed that the desired seat response could be achieved with only the torso body block load. However, the agency requested comments on whether the quasi-static test should apply a pelvic block loading. IMMI, CEW and Blue Bird agreed with the NPRM as it relates to not applying pelvic block loading during the quasi-static test as it would not make a significant contribution to the seat back loading/displacement. Blue Bird argued it would be an unnecessary complication.

Takata was the sole commenter indicating a preference for the pelvic loading. Takata also indicated that there should be limits placed on the lateral displacement of lap belt anchorages, consistent with ECE R14, to reduce the likelihood of occupants loading each other. It requested that after the belt loading sequence in the quasi-static test, the anchorage spacing of a 330 or 380 mm (13 or 15 inches) seating position

should be not less than 305 or 350 mm (12 or 13.77 inches), respectively.

Agency Response

We agree with the majority of commenters and continue to believe that pelvic block loading would be of no consequence to the outcome of the quasi-static test. Therefore, the only reason to apply the pelvic load would be to implement the Takata recommendation to restrict the change in lateral anchorage spacing after belt loading in the quasi-static test, consistent with ECE R14. We are not convinced that the quasi-static test as currently written would be appropriate to ascertain the tendency for anchorages to displace in the real world. The quasi-static test pulls only on the torso belt. The pelvic belt portion of the restraint is not pulled. To implement the ECE R14 requirement according to the Takata suggestion, the test would need to pull on the pelvic belt portion, which is not done in the test. In addition, the ECE R14 requirements are applicable to general passenger vehicles and are not specifically tailored to school buses. In Europe, non-school buses, and not buses designed to meet the compartmentalization requirements in FMVSS No. 222, are used.

ECE R14 is essentially the analogous regulation to FMVSS No. 210. After application of loading to the anchorages, the minimum allowed anchorage spacing cannot be violated. We note that FMVSS No. 210 has no equivalent requirement to limit lateral anchorage spacing after anchorage loading. The agency has never found that a safety need exists for such a requirement in any vehicle to which FMVSS No. 210 applies. In addition, application of the suggested provision would be design restrictive, effectively eliminating flex-seat designs with sliding lower anchorages. As we expressed in section IX.b.5., we see no safety need to disallow such designs. Moreover, the commenter did not provide any test data to support the contention that performance would be compromised by allowing anchors to slide.

viii. In the NPRM, we proposed that any seating position that has greater than a 380 mm (15 inches) seat width would be exposed to a body block load based on a 50th percentile male occupant (5,000 N (1,124 pounds) and 7,500 N (1,686 pounds) for large and small school buses, respectively). Any seating position that has the minimum seating width of 380 mm (15 inches) would be exposed to a torso body block load based on a 5th percentile female occupant (3,300 N (742 pounds) and 5,000 N (1,124 pounds) for large and small school buses, respectively).[66] Thus, a bench seat having a width between 1,140 mm (44.9 inches) and 1,165 mm (45.9 inches) could have three belted positions that need to meet the 5th percentile female loading.

Takata suggested that if the minimum seat width for a lap/shoulder belt seating position is maintained at 380 mm (15 inches), all seating positions should be loaded assuming 50th percentile male occupants rather than the 5th percentile female occupants. Takata argued that the reduced load is not representative of potential worst case usage.

Agency Response

There is a potential that three 50th percentile (or larger) males may try to sit in a 1,143 mm (45 inch) wide seat with three lap/shoulder belts. However, data submitted by Takata indicates the shoulder width of a 50th percentile male is 465 mm (18.3 inches), substantially larger than the 380 mm (15 inch) seat spacing. In making a determination of appropriate loading, the agency must consider the probability of a loading situation occurring. We are not convinced that the likelihood of this misuse condition is high, and Takata has not provided the agency any information as to the likelihood of the loading scenario they described.

Further, there is an issue of the practicability of requiring seats to meet the quasi-static requirements assuming three 50th percentile males are occupying all three lap/shoulder belt positions. The agency has no quasi-static testing or sled testing in this configuration. This would represent a 50 percent increase in stringency for total torso body block loading for seats that would fall in this category. We estimated the torso body block load normalized to the upper loading bar. Increasing the total torso body block loading by adding an additional torso load (50 percent increase) would result in a load of 13,770 N (3,096 pounds) and 9,180 N (2,064 pounds) for the small and large school bus cases, respectively.

The small school bus load would clearly exceed the upper limit of the force-deflection zone required by S5.1.3 of FMVSS No. 222. In the 2007 Technical Analysis we discussed the implications of requiring a normalized torso body block load that was at or above the upper limit of the force-deflection zone. We stated that such a requirement might necessitate novel designs that have an energy absorbing phase during seat back contact with unbelted occupants and a stiff phase when the belted occupant is loading the seat back through the anchorage. These designs will take time and resources to develop.

Ultimately, the agency must establish a reasonable limit to the seating position width that should be expected to accommodate a 50th percentile male and the associated belt loading. This is particularly true given our new minimum width of 330 mm (13 inches) for the ''small occupant seating position'' of flex-seats. Given the available information, we see no sufficient reason to change the load requirement from what was proposed.

The question arises as to what should be the appropriate torso body block loading for a flex-seat at its maximum occupant capacity. NHTSA believes that it is reasonable to assume that the outside seating positions of a flex-seat, in a maximum occupancy configuration, could be loaded to levels consistent with occupancy by adult 5th percentile adult females and so is adopting that load requirement. Certainly, larger occupants could be present in these outside seats, but this would result in the center seating position accommodating correspondingly smaller occupants. Assuming the outside seats are occupied by 5th percentile adult females (a 12-year-old child is approximately the size of a 5th percentile adult female), the center seat could be occupied by an occupant about the size of a 10-year-old. This is consistent with our allowance for a lower anchor height for the center seat of flex-seats. Nonetheless, we believe that it is in the best interest of safety to maintain the loading of this position to the same level as the other positions on a flexible occupancy seat, i.e., equivalent to that of a 5th percentile adult female.

There is not much of a difference between the associated loads of a 5th percentile adult female and a 10-year-old child. Our latest data on the mass of a 10-year-old is 37.2 kg (82 pounds). The total percentage increase in applied torso load between assuming three 5th percentile females or two 5th percentile females and one 10-year-old would be 9% $[((3 \times 49) - ((2 \times 49) + 37.2)/((2 \times 49) + 37.2)]$. We have no practicability concerns with the three-across 5th percentile female loading on a flexible occupancy seat. Moreover, the approach is consistent with the load level that the

[66] S5.1.6.5.5 specified that 5,000 N is applied to the torso belts if the bench width is no more than 25 mm greater than the number of belted positions (Y) times 380 mm (15 inches). A wider bench indicates that there is nominally more than 380 mm (15 inches) per belted seating positions and the load applied to the torso belts must be 7,500 N.

agency is establishing for other three-seating position bench seats with fixed lap/shoulder belts.

Accordingly, the agency has concluded that flex-seats in a maximum occupancy configuration must be loaded in the quasi-static test to a level consistent with all seat positions being occupied by 5th percentile female occupants, that is to say, a torso body block load of 3,300 N (742 pounds) and 5,000 N (1,124 pounds) for large and small school buses, respectively. This would include flexible occupancy seating positions down to a 330 mm (13 inch) width, up to a fixed seat width of nominally 380 mm (15 inches). As was proposed, seating positions with widths of 380 mm (15 inches) or larger are load values consistent with occupancy of a 50th percentile male occupant.

ix. CEW asked that the agency to modify the quasi-static energy absorption requirement such that the upper loading bar load remains in the present FMVSS No. 222 force-deflection corridor. They argued that the compartmentalized occupant behind a belted occupant should be offered the full protection of a seat back that can stay within the force-deflection corridor and not just that of a seat back that meets the reduced performance level proposed in the NPRM.

Agency Response

We believe there is merit to the CEW request. In the preamble of the NPRM, we contrasted the energy absorption for an occupant behind belted and unbelted occupants. We stated that for unbelted occupants behind belted occupants, ''the manner of absorbing energy would not be as controlled as when impacting a seat back that had not been subjected to the previous loading from the seat belts.'' An altered performance level as specified in the force-deflection corridor would no longer be applied. However, the required amount of energy absorption remained the same as specified by S5.1.3. We believed that this was necessary because the torso belt pull would have loaded the seat back into plastic deformation and it was unclear how well controlled the force/deflection curve of subsequent loading with the upper loading bar could be.

According to CEW, at least for their design, this subsequent loading is sufficiently controllable. In fact, the agency's own data is verification of CEW's position. Figures 2 and 3 below entitled, ''CEW with three fixed width seating positions'' and ''CEW with two fixed width seating positions,'' respectively, show the force-deflection curves of the upper loading bar in the quasi-static test for a CEW unified frame design.[67]

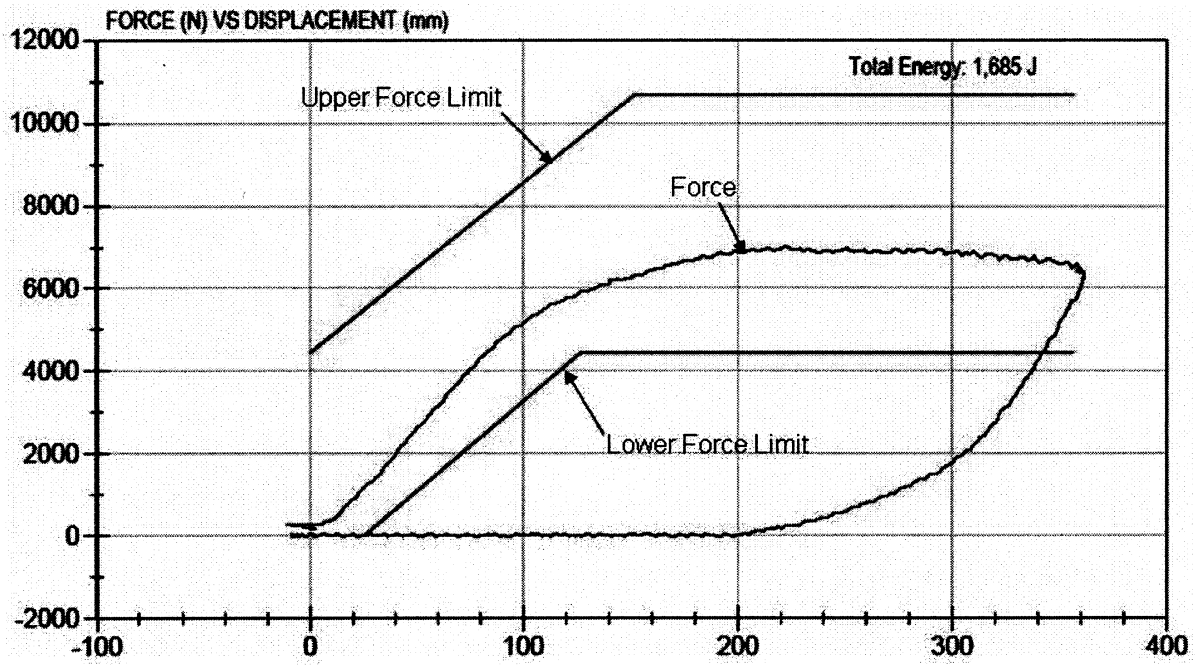

Figure 2: CEW with three fixed width seating positions.

[67] NHTSA–2007–0014–0016.

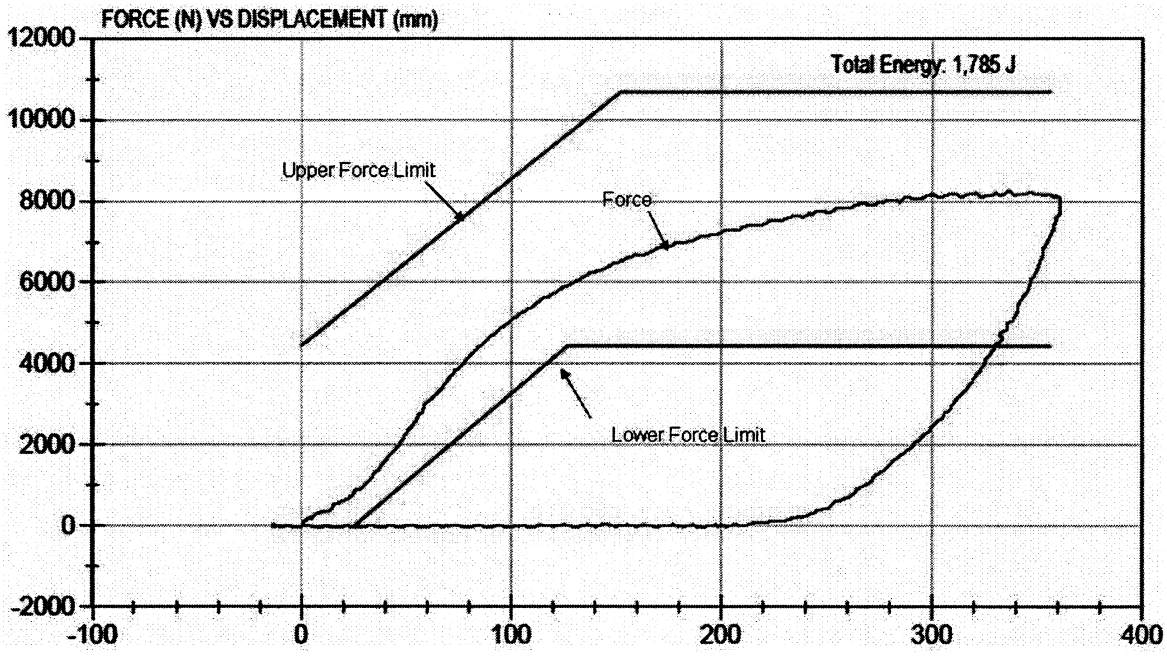

Figure 3: CEW with two fixed width seating positions.

However, we are concerned that adopting the entire corridor may unnecessarily restrict the design of seat backs other than that of conventional unified frame seats. Figures 4 and 5 below, ''IMMI–V1 with three fixed width seating positions'' and ''IMMM–V1 two fixed width seating positions,'' respectively, show the results of agency testing for the IMMI–V1 dual frame design. Note that the force/deflection curve exits the lower boundary at the location of the upward slope and reenters at the flat portion of the boundary. However, this design still achieved the necessary amount of energy absorption prior to 356 mm of displacement in the case of the two-position seat and prior to exiting the upper bound of the corridor in the case of the three-position seat. We note that testing with a prototype considered by IMMI showed a force-deflection signature that remained within the required corridor.[68]

Our concern about being design restrictive relates to imposing the lower bound of the corridor. For the dual frame design in the quasi-static test, the inner frame will have been initially pulled away from the rest of the seat back. As the upper loading bar initially loaded the outer seat back frame, for this particular version of the IMMI design (IMMI–V1) this outer frame did not offer sufficient resistance to stay in the corridor and neither did it meet the proposed anchorage displacement requirement.[69] If the manufacturer were to modify the design so as to meet the new torso anchor point displacement limit, the seat will have a stronger inner frame. We are concerned that strengthening of the inner frame would make it problematic to strengthen the outer frame such that it could stay above the lower bound of the force deflection curve.[70] The result of the prototype IMMI design staying within the corridor does not change this conclusion since that design also did not meet the new torso anchor point displacement limit.

However, we do believe it is reasonable to expect a compliant dual frame design to stay below the upper bound of the corridor. Accordingly, we are adopting the upper boundary of the corridor, so the seat back must perform such that the top loading bar force must stay within the top of the force/deflection corridor specified for the compartmentalization requirement. This requirement helps ensure that the seat back will not be too stiff in containing the unbelted passenger in a crash.

BILLING CODE 4910–59–P

[68] ''NHTSA Technical Analysis to Support the Final Rule Upgrading Passenger Crash Protection in School Buses,'' September 2008.

[69] This version of the IMMI seat is no longer manufactured.

[70] This is because the combined frame still needs to stay in the corridor for the S5.1.3 energy requirement.

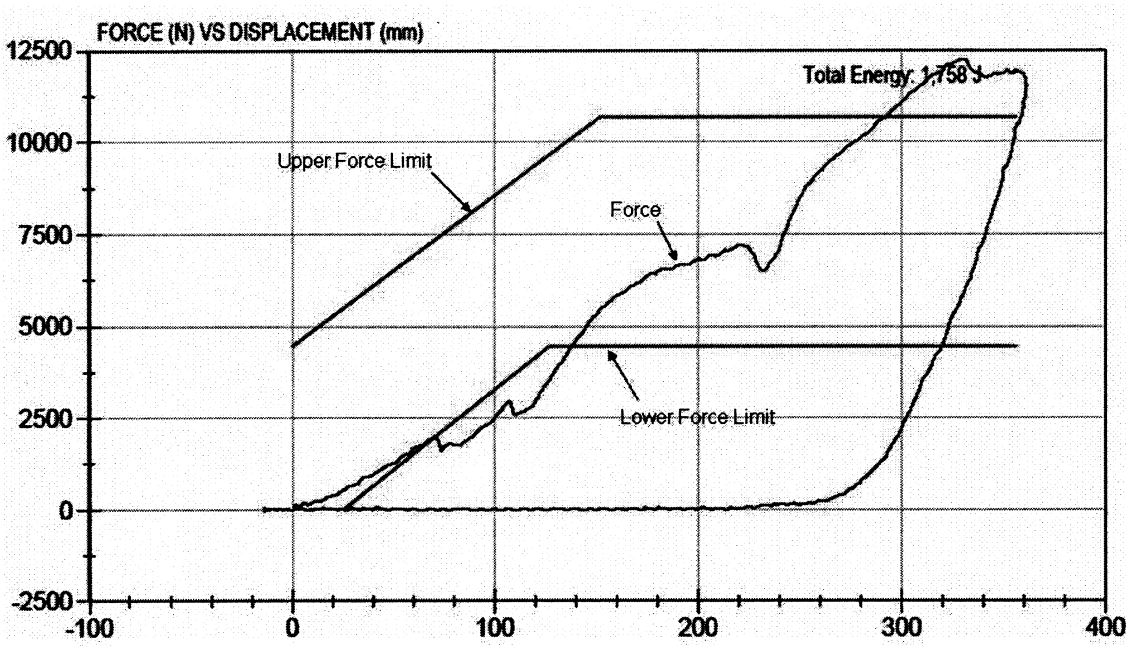

Figure 4: IMMI-V1 with three fixed width seating positions.

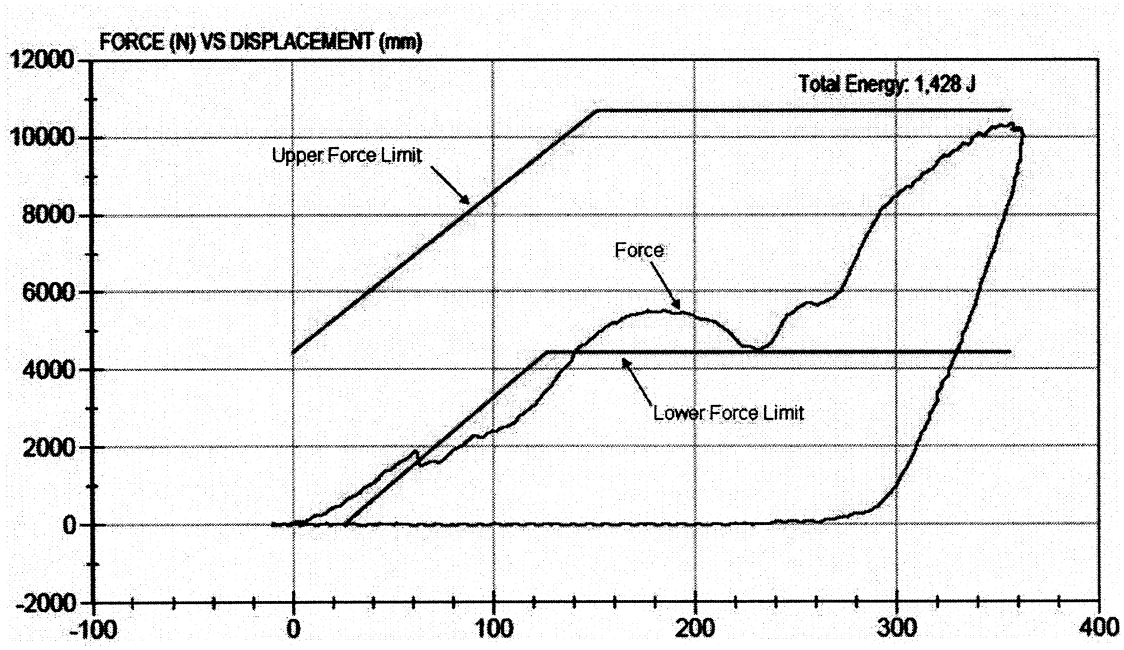

Figure 5: IMMI-V1 with two fixed width seating positions.

x. CEW and Girardin requested that lap/shoulder belt equipped seats not have to independently meet the energy absorption requirement of S5.1.3 since the quasi-static test addresses this separately. Takata asked that the energy quasi-static energy absorption requirement be met prior to the seat back going beyond a specified displacement plane.

Agency Response

We do not agree with this request. We still believe it is important that the seat back meet the compartmentalization requirement as it currently exists, i.e., prior to the seat being deformed or stressed by belt loading. Even when there are lap/shoulder belts on school buses, some occupants may not use them. In that case,

compartmentalization is the only restraint method. We have no guarantee, nor have we been shown any data indicating, that a seat back remaining in the corridor after belt loading will always be in the corridor prior to belt loading. In addition, to implement the CEW and Girardin recommendation the quasi-static test would have to impose compliance with the entire force-deflection corridor. As we explained above, we are not imposing the lower bound at this time.

xi. Both Freedman and Blue Bird requested that the displacement limit in the energy absorption phase of the quasi-static test begin when the 44 N (10 pounds) is obtained as a result of upper loading bar in S5.1.6.5.7 as opposed to when the 44 N (10 pounds) is applied when the seat back position is determined in S5.1.6.3.

Agency Response

The comments indicate confusion as to where the calculation of displacement for the energy calculation in S5.1.6.5.7 should begin. It is to begin when 44 N of force is achieved in the upper loading bar during the load application specified in S5.1.6.5.7. Changes have been made to the regulatory text to make this clear.

xii. We also sought comment on the proposed procedure (see S5.1.6.5.4 of the proposed rule) for positioning the torso block used in the quasi-static test. We also asked whether the proposed procedure was sufficiently clear and whether there are ways to improve the clarity of the test procedure.

Several commenters addressed the proposed 300 N (67 pounds) preload used in the test. CEW stated testing indicated that the 300 N (67 pounds) preload is not sufficient to hold the torso body block in place until the full load is applied. They recommended that the preload be increased to 896 N (200 pounds). Freedman stated that it was difficult to position the torso body blocks as described in S5.1.6.5.4 and the 300 N (67 pound) preload seemed inadequate to position the torso body block in the prescribed zone. Freedman recommended that the preload be increased to a load between 890 to 1,334 N (200 to 300 pounds). Freedman indicated that the torso body block was also difficult to position without any support beneath it. They requested clarification on whether the use of supports to help position the body block within the required zone was permissible.

Blue Bird stated that their experience has been that a 300 N (67 pounds) preload applied slightly upward (5–15 degrees) is not sufficient to counteract the body block weight and hold it such that the applied load remains at the desired angle. They did not suggest a specific load, but stated their belief it would be several hundred pounds. They stated that at such a weight, the seat belt webbing stretches and seat back displacement becomes a concern. They suggested the use of a spacer on top of the seat cushion as a superior alternative method to achieve the desired initial body block position until the applied load negates the gravitational pull on the body block.

Agency Response

After considering the comments, the agency is revising the applied preload and positioning zone for the torso body block. We found that a preload of 600 N (135 pounds) will position the torso body block in a repeatable manner without the use of any support under the block.[71]

In addition, the agency has found that the zone for locating the origin of the torso body block radius must be referenced to the adjusted height of the torso belt to address flex-seat designs. As earlier discussed in this preamble, this final rule specifies that the torso belt adjusted height will be 38 mm (1.5 inches) below its highest position of adjustment to account for slippage. In addition, for small occupant seating positions of a flex-seat, this adjusted position may be well below 400 mm above the SgRP.

The agency evaluated the sensitivity and repeatability of the torso body block position to preload values and torso belt adjusted height. Our analysis showed that a preload of 600 N (135 pounds) was sufficient to position the torso body block in a repeatable manner without the use of any support under the block. The origin of the torso block will still be located no more than 100 mm forward of the SgRP. However, the vertical zone is now referenced to the torso belt adjusted height. This zone is established by locating a horizontal plane that has a vertical position halfway between the torso belt adjusted height and 100 mm below the SgRP. The origin of the torso body block radius must be within 75 mm (3.0 inches) of this plane. Mathematically, the vertical location of the upper and lower plane is as follows:

Upper Plane = (TBAH – 100)/2 + 75 = (TBAH)/2 + 25 mm

Lower Plane = (TBAH – 100)/2 – 75 = (TBAH)/2 – 125 mm

Where TBAH is the torso belt adjusted height above the SgRP.

Figure 6 below shows the newly defined zone. The new torso block zone now ''floats'' with the torso belt adjusted height, which allows a reasonable and achievable zone that can be used with the large potential range of belt heights on school bus seats. This is particularly important when the center position is a flexible occupancy seat that potentially has a lower torso anchor point height.

[71] ''FMVSS No. 222 School Bus Seat Quasi-Static Testing for Various School Bus Seats Equipped with Type 2 Seat Belts, Torso Block Preload and Positioning,'' General Testing Laboratories, Inc., July 2008.

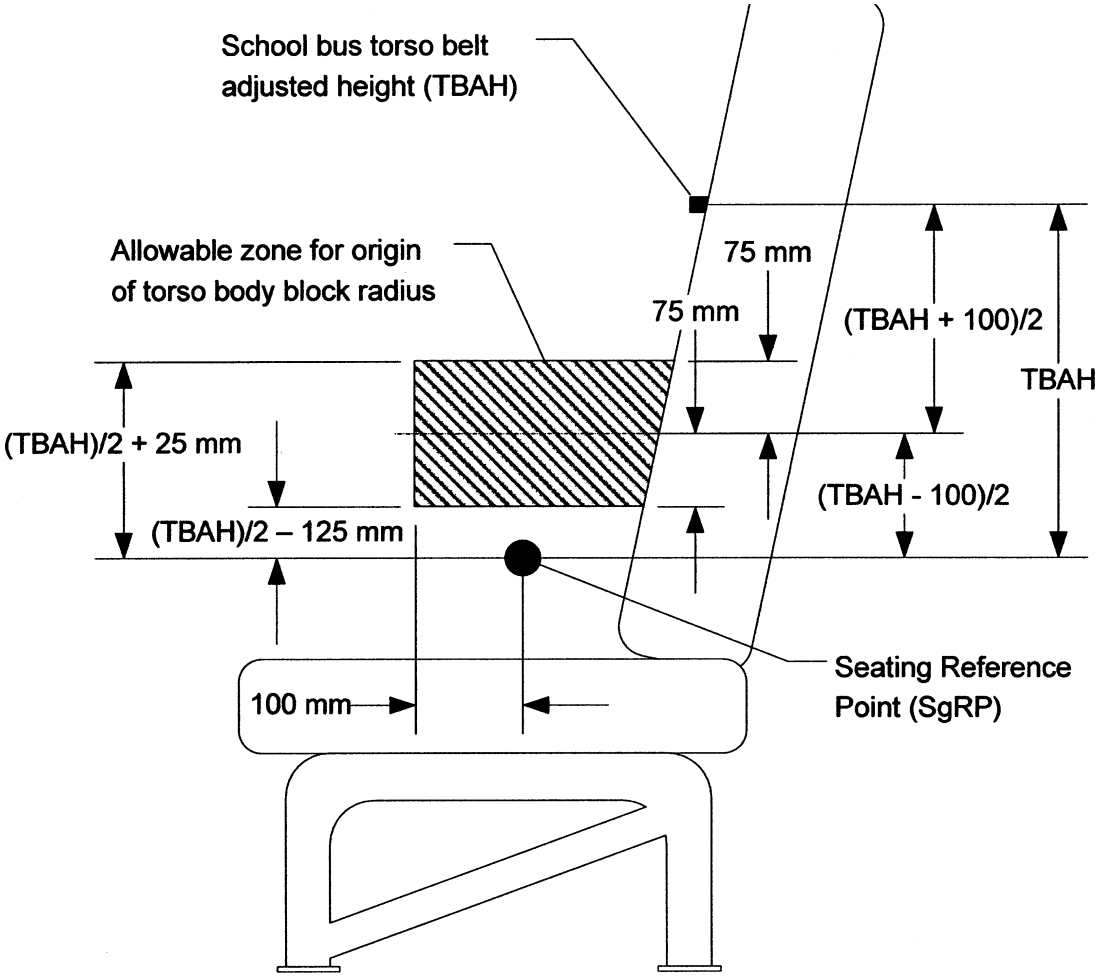

Figure 6: Zone in which the origin of the torso block radius must be located.

xiii. IMMI, Takata and Concepts all asked that the agency allow dynamic certification of lap/shoulder belt equipped school bus seats as an alternative to the quasi-static test. These tests would use instrumented dummies and IARVs. They stated that sled or full-vehicle crash testing more accurately represents ''real world'' performance.

Agency Response

These commenters are addressing an issue (dynamic testing) that is outside the scope of this rulemaking since a dynamic test component was expressly not proposed by NHTSA. Nonetheless, the agency wishes to take this opportunity to provide some views on the issue.

In the preamble to the NPRM, the agency stated it was proposing the quasi-static test instead of a dynamic test because ''manufacturers are familiar with quasi-static testing * * * [M]anufacturers would be able to test a large number of seats and a variety of design configurations without incurring the delay and additional cost of sending each configuration to an outside testing facility.'' In terms of testing cost, we continue to believe it is less expensive to certify compliance by the quasi-static test than it would be to perform a dynamic equivalent. Now, with the advent of flex-seats that must be tested in several occupant configurations, this cost differential may be even larger. Because the quasi-static test is less costly than sled testing, the quasi-static test allows testing of more seating systems on a school bus and/or more school buses than 5 if a sled test were specified.

In addition, a quasi-static test is currently specified in FMVSS No. 222 to test the performance characteristics of compartmentalization. The test has been successful in ensuring the integrity of the compartmentalized passenger compartment since the inception of FMVSS No. 222. A quasi-static test to assess the effect that lap/shoulder belts have on the compartmentalized seating systems thus is a rational aspect of this rulemaking, as it broadens the current successful framework used to assess school bus seating systems and extends it to assess the effect that equipment (lap/shoulder belts) added to the systems affect the seating systems. Developing a dynamic test for lap/shoulder belts in FMVSS No. 222 would

take further study and investment of agency resources that the agency believes is more appropriately directed to other priorities at this time.

xiv. This final rule excludes the last row of seats from the portion of the quasi-static test where the rear loading bar load is applied to simulate the force imposed by compartmentalized occupants seated in a more rearward seat row. However, the torso body block loading will still be applied and the anchor point displacement limit must still be met. The reason for this exclusion is that there will be no occupants rearward of the last row of occupants. However, the standard will ensure that the lap/shoulder belts are capable of adequately restraining the occupants in the last row in a frontal impact.

This exclusion is consistent with other exclusions of FMVSS No. 222 applied to the last seat row that were adopted based on the appropriateness of the requirement as applied to the last row. In this rulemaking, we have excluded from the FMVSS No. 210 requirement, that last row seat belt anchorages be integrated in the seat structure. Similarly, the last row is currently excluded from the compartmentalization energy absorption requirement of FMVSS No. 223 at S5.1.3.

d. Lap Belt Buckle Belt Length

In the NPRM, we noted that for a proper fit, the lap belt or lap belt portion of a lap/shoulder belt must fit low across the occupant's hips so that the crash loads are distributed across the pelvis and not the abdominal area. Loading of the abdomen rather than the pelvis increases the risk of internal injuries caused by the seat belt penetration into the soft tissue of the abdomen. We stated that we were aware that lap belts supplied to some states have long buckle stalks or long belt lengths between the ''seat bight'' (approximately the intersection of the seat cushion and seat back) and buckle that cause the lap belt to not fit low across the hips of the passengers. We asked for comment on whether such designs should be retained because of privacy issues, even if the long buckle stalks may result in misplacement of the lap belt across the child's abdomen and difficulty in child restraint attachment.

Most commenters responding to this issue supported the short buckle stalks. CEW agreed that a longer buckle stalk can allow the seat belt to engage in the abdominal area, whereas a shorter buckle stalk forces the belt engagement lower in the pelvic area. However, they stated they respected the privacy considerations and that they let the end user decide whether to use longer buckle stalks. IMMI stated belt buckles should not be permitted to ride across the abdomen and recommended that NHTSA establish a maximum length limit for the distance between the buckle tip and the seat bight. SafeRide News stated that a much shorter buckle stalk should be used, similar to that found in most private passenger vehicles, with which children are familiar from buckling themselves up. On the other hand, NYAPT stated its belief that the longer stalks can make the seat belt system more conducive to emergency evacuations of children, particularly children with special needs.

Agency Response

In this final rule, to optimize crash protection on school buses, we are limiting the location of the distance between the buckle end and associated latch plate to within 65 mm (2.6 inches) of the SgRP (FMVSS No. 222, S5.1.7). We agree with the commenters that privacy concerns are somewhat allayed by having the seat belt buckles located at the children's sides and not in the middle of the seating position. In response to NYAPT, we understand its concern but believe that the pros of the belt positioned in the pelvic area outweigh the concerns about emergency evacuation. Further, emergency evacuation could be facilitated by the similarity of the short buckle stalks with the family vehicle and the familiarity of the short buckle stalk to the children, as stated by SafeRide News. Driver and student training in emergency evacuation procedures should also help in timely egress from the vehicle.

The measurement is taken by pulling the lap portion of the belt webbing on the latchplate side with a 20 N force applied in the vertical longitudinal plane. (The seat belt assembly is buckled during the test.) The load is applied through a range of angles and the end of the buckle/latchplate assembly must not go beyond a defined limit plane. The limit plane is 40 degrees from the horizontal, transverse with respect to the vehicle and is 65 mm from the SgRP. We have chosen the SgRP as the reference point for measurement since it is more objective than trying to use the seat bight. The 65 mm (2.6 inch) value is based on measurements from seats manufactured by IMMI and Takata. (See discussion in the 2008 Technical Assessment.) All the measured seats would meet the proposal. We also placed a 6YO test dummy in these seats to get an indication of the buckle location with respect to the dummy abdomen and found the location to be acceptable, i.e., the belt was placed nearer to the hip area and not high on the abdominal region.

XI. Lead Time

The NPRM proposed a one year lead time for school bus manufacturers to meet the new requirements for a 24-in minimum seat back and seat cushion retention, since there is limited or no development necessary for these changes. We also proposed a one-year lead time for meeting requirements for voluntarily installed seat belts in large school buses and a three year lead time for meeting mandatory installation in small school buses. We stated our belief that three years are necessary for small school buses since some design, testing, and development will be necessary to certify compliance to the new requirements. We also proposed that optional early compliance be permitted.

IC Corporation requested that NHTSA allow the same lead time for large buses as for small buses, three years, to allow for ''adequate time to properly engineer, tool and validate the designs.'' The commenter stated that the rulemaking establishes new design and performance standards for lap/shoulder belts on large school buses and that time is needed to design, develop and test the systems.

In response, NHTSA agrees with the comment. There is good cause for the lead time because school bus manufacturers need time to design and manufacture school buses that meet the performance requirements adopted by this final rule. We have thus provided a one year lead time for compliance with the requirement to install higher seat backs and restraining barriers on all school buses and to meet the seat cushion retention test. A three year lead time is provided for meeting requirements for voluntarily installed seat belts (lap belts and lap/shoulder belts) in large school buses and for mandatory lap/shoulder belts in small school buses. Optional early compliance is available for all of these amendments, as of the date of publication of this final rule.

XII. Rulemaking Analyses and Notices

Executive Order 12866 and DOT Regulatory Policies and Procedures

This rulemaking document was not reviewed by the Office of Management and Budget under E.O. 12866 and is not considered to be significant under E.O. 12866 or the Department's Regulatory Policies and Procedures (44 FR 11034; February 26, 1979). NHTSA has

prepared a final regulatory evaluation (FRE) for this final rule.[72]

This final rule requires: (a) For all school buses to increase seat back height from 508 mm (20 inches) to 610 mm (24 inches), and to require a self-latching mechanism for seat bottom cushions that are designed to flip up;[73] and (b) for small school buses (GVWR of 4,536 kg (10,000 pounds) or less, passenger seat lap/shoulder belts in lieu of the currently-required lap belts. School bus manufacturers will be required to certify that the belt systems meet specifications for retractors, strength, location and adjustability. Under the requirements, seat backs with lap/shoulder belts are subject to a quasi-static test to assure that the seat backs are strong enough to withstand the forces from a belted passenger and that of an unbelted passenger seated behind the belted occupant. This final rule also requires: Performance requirements for voluntarily-installed seat belts on large (over 4,536 kg (10,000 pounds)) school buses. For large school buses with voluntarily-installed lap/shoulder belts, the vehicle would be subject to the requirements described above for lap/shoulder belts on small school buses, except that applied test forces and performance limits would be adjusted so as to be representative of those imposed on large school buses. Large school buses with voluntarily-installed lap belts would be required to meet anchorage strength requirements. This final rule does not require seat belts to be installed on large school buses. The performance requirements for seat belts on large school buses affect large school buses only if purchasers choose to order seat belts on their vehicles.

The *School Bus Fleet 2007 Fact Book* on U.S. school bus sales for the sales years 2001–2005 reports that for each of these years on average, approximately 40,000 school buses were sold. NHTSA estimates that of the 40,000 school buses sold per year, 2,500 of them were 10,000 pounds GVWR or under. The other 37,500 school buses were over 10,000 pounds GVWR. Four states currently require high back seats (Illinois, New Jersey, New York, and Ohio). These states have 21.7 percent of the sales. Thus, the high back seat incremental costs apply to 78.3 percent of these sales or 1,958 buses that are 10,000 pounds GVWR or under and 29,362 buses that are over 10,000 pounds GVWR.

Small School Buses

NHTSA estimates that the costs of this rulemaking are the incremental cost of the higher (24 inch) seat back ($45 to $64 per small school bus for 78.3 percent of the fleet) plus the incremental cost for lap/shoulder belts over lap belts of $1,121 to $2,417. This amounts to a total incremental cost per school bus of $1,166 to $2,481 per bus for those states without high back seats. If it is assumed that in a given year, 2,500 small school buses are sold, for all small school buses, the total incremental costs of this rulemaking are estimated to be from $2,889,000 ($45 × 1,958 + $1,121 × 2,500 small school buses) to $6,167,000 ($64 × 1,958 + $2,417 × 2,500 small school buses).

The estimated benefits resulting from the higher seat backs and lap/shoulder belts on small school buses is, per year, 43 fewer injuries, and 0.8 fewer fatalities.

Large School Buses

Costs of Higher Seat Backs on Large School Buses—In this final rule, all large school buses must have the higher seat backs of 24 inches. NHTSA estimates the cost per large school bus of the higher seat back to be $125. NHTSA estimates that the total costs of the higher seat backs on large school buses to be $3,680,000 (29,362 large school buses times $125.40).

Benefits of Higher Seat Backs on Large School Buses—The benefits from higher seat backs on large school buses is estimated to be 23 fewer injuries per year, and 0.14 fewer fatalities per year.

Costs and Benefits of Performance Requirements for Voluntarily-Installed Belts on Large School Buses—As earlier noted, nothing in this rulemaking requires any party to install lap or lap/shoulder belts at passenger seating positions in large school buses. Instead, this rulemaking specifies performance requirements that voluntarily-installed lap or lap/shoulder belts at passenger seating positions must meet. Lap or lap/shoulder belts that are now installed in large school buses are affected by this rulemaking, in that the voluntarily-installed belt systems would be subject to the performance requirements set forth in this final rule whereas currently the systems are not subject to any Federal standard. The agency is unable to estimate the costs and benefits of this part because not enough is known about the requirements that state and local authorities now specify for the performance of seat belt systems on large school buses.

Overview of Costs and Benefits

Costs of High Back Seats and Lap/Shoulder Belts for Small School Buses, and of High Back Seats for Large School Buses

Small School Buses: Adding together the high back seat incremental cost of $45 to $64 to the incremental cost for lap/shoulder belts over lap belts of $1,121 to $2,417, results in a total incremental cost of $1,166 to $2,481 per bus.

Large School Buses: The incremental cost for high back seat is estimated to be $125 per bus.

TABLE 1—TOTAL COSTS (PER BUS AND FOR THE FLEET)

[$2006]

	Large buses 66 passenger	Small buses 14 passenger	Small buses 20 passenger
Per Bus Costs	$125	$1,166	$2,481.
Annual Fleet Costs	$3.7 million	$2.9 million	$6.2 million.
Combined Annual Fleet Costs	$6.6 to $9.9 million.		

[72] NHTSA's FRE discusses issues relating to the potential costs, benefits and other impacts of this regulatory action. The FRE is available in the docket for this final rule and may also be obtained by contacting *http://www.regulations.gov* or by contacting DOT's Docket Management Facility, M–30, U.S. Department of Transportation, West Building, Ground Floor, Rm. W12–140, 1200 New Jersey Avenue, SE., Washington, DC 20590, telephone 202–366–9324.

[73] The agency estimates that a self-latching mechanism on flip-up seat bottoms will cost less than $3 per seat, or $66 per bus. This cost was not included in the estimates given below.

Benefits of High Back Seats and Lap/Shoulder Belts for Small School Buses, and of High Back Seats for Large School Buses

The benefits for small school buses and large school buses are estimated as shown below in Table 2:

TABLE 2—TOTAL BENEFITS

	Small school bus		Large school bus		Total	
	Injuries	Fatalities	Injuries	Fatalities	Injuries	Fatalities
High Back Seat	Combined below [1]		23	0.14	23	0.14
Lap/Shoulder Belts	43	0.08	n.a.	n.a.	43	0.08
Total	43	0.08	23	0.14	66	0.22

[1] We did not have test data to allow us to separate out the high back seats from lap/shoulder belts for small school buses; thus, these data have been combined.

Regulatory Flexibility Act

Pursuant to the Regulatory Flexibility Act (5 U.S.C. 601 et seq., as amended by the Small Business Regulatory Enforcement Fairness Act (SBREFA) of 1996), whenever an agency is required to publish a notice of proposed rulemaking or final rule, it must prepare and make available for public comment a regulatory flexibility analysis that describes the effect of the rule on small entities (i.e., small businesses, small organizations, and small governmental jurisdictions). The Small Business Administration's regulations at 13 CFR Part 121 define a small business, in part, as a business entity ''which operates primarily within the United States.'' (13 CFR 121.105(a)). No regulatory flexibility analysis is required if the head of an agency certifies that the rule will not have a significant economic impact on a substantial number of small entities. The SBREFA amended the Regulatory Flexibility Act to require Federal agencies to provide a statement of the factual basis for certifying that a rule will not have a significant economic impact on a substantial number of small entities.

NHTSA has considered the effects of this rulemaking action under the Regulatory Flexibility Act. According to 13 CFR section 121.201, the Small Business Administration's size standards regulations used to define small business concerns, school bus manufacturers would fall under North American Industry Classification System (NAICS) No. 336111, *Automobile Manufacturing*, which has a size standard of 1,000 employees or fewer. Using the size standard of 1,000 employees or fewer, NHTSA estimates that there are two small school bus manufacturers in the United States (U.S. Bus Corp. and Van-Con). NHTSA believes that both U.S. Bus Corp and Van-Con manufacture small school buses and large school buses.

I hereby certify that this final rule will not have a significant economic impact on a substantial number of small entities. In this final rule, the small businesses manufacturing small buses will incur incremental costs ranging from a low of $1,166 to $2,481 per small school bus, out of a total cost of $40,000 to $50,000 per small school bus. The small businesses manufacturing large school buses will incur incremental costs of $125 per school bus (out of a total of more than $70,000) for the costs of the higher seat backs. The costs of lap/shoulder belts on large school buses is not a factor, as nothing in this final rule requires lap/shoulder belts or lap belts at passenger seating positions in large school buses.

The relatively minimal additional costs outlined above for large and small school buses will be passed on to school bus purchasers. Those purchasers are required to be sold school buses if they purchase a new bus, and to use school buses. Thus, small school bus manufacturers will not lose market share as a result of the changes in this final rule. While small organizations and governmental jurisdictions procuring school buses will be affected by this rulemaking in that the cost of school buses will increase, the agency believes the cost increases will be small compared to the cost of the vehicles and that the impacts on these entities will not be significant.

Executive Order 13132

NHTSA has examined today's final rule pursuant to Executive Order 13132 (64 FR 43255, August 10, 1999). On July 11, 2007, NHTSA held a public meeting bringing together a roundtable of state and local government policymakers, school bus manufacturers, pupil transportation associations and consumer groups to discuss the safety, policy and economic issues related to seat belts on school buses (see NHTSA Docket 28103). No additional consultation with States, local governments or their representatives is contemplated beyond the rulemaking process. Further, the agency has concluded that the rulemaking will not have federalism implications because it will not have ''substantial direct effects on the States, on the relationship between the national government and the States, or on the distribution of power and responsibilities among the various levels of government.'' This final rule specifies performance requirements for seat belts voluntarily installed on large school buses, but does not require the belts on the large buses.

Further, no consultation is needed to discuss the preemptive effect of today's rulemaking. NHTSA rules can have preemptive effect in at least two ways. First, the National Traffic and Motor Vehicle Safety Act contains an express preemptive provision: ''When a motor vehicle safety standard is in effect under this chapter, a State or a political subdivision of a State may prescribe or continue in effect a standard applicable to the same aspect of performance of a motor vehicle or motor vehicle equipment only if the standard is identical to the standard prescribed under this chapter.'' 49 U.S.C. 30103(b)(1). It is this statutory command that preempts State law, not today's rulemaking, so consultation would be inappropriate.

Second, in addition to the express preemption noted above, the Supreme Court has also recognized that State requirements imposed on motor vehicle

manufacturers, including sanctions imposed by State tort law, can stand as an obstacle to the accomplishment and execution of a NHTSA safety standard. When such a conflict is discerned, the Supremacy Clause of the Constitution makes their State requirements unenforceable. See *Geier* v. *American Honda Motor Co.*, 529 U.S. 861 (2000). NHTSA has not discerned any potential State requirements that might conflict with the final rule, however, in part because such conflicts can arise in varied contexts. We cannot completely rule out the possibility that such a conflict might become apparent in the future through subsequent experience with the standard. NHTSA may opine on such conflicts in the future, if warranted.

National Environmental Policy Act

NHTSA has analyzed this final rule for the purposes of the National Environmental Policy Act. The agency has determined that implementation of this action would not have any significant impact on the quality of the human environment.

Paperwork Reduction Act

Under the procedures established by the Paperwork Reduction Act of 1995, a person is not required to respond to a collection of information by a Federal agency unless the collection displays a valid OMB control number. Today's final rule does not establish any new information collection requirements.

National Technology Transfer and Advancement Act

Under the National Technology Transfer and Advancement Act of 1995 (NTTAA) (Pub. L. 104–113), ''all Federal agencies and departments shall use technical standards that are developed or adopted by voluntary consensus standards bodies, using such technical standards as a means to carry out policy objectives or activities determined by the agencies and departments.'' OMB Circular A–119 ''Federal Participation in the Development and Use of Voluntary Consensus Standards and in Conformity Assessment Activities'' (February 10, 1998) establishes policies to implement the NTAA throughout Federal executive agencies. In section 4.a. of OMB Circular A–119, ''voluntary consensus standards'' are defined as standards developed or adopted by voluntary consensus standards bodies, both domestic and international. After carefully reviewing the available information, NHTSA has determined that there are no voluntary consensus standards relevant to this rulemaking.

In its comments to the November 21, 2007 NPRM, the National Association of State Directors of Pupil Transportation Services (NASDPTS) suggested that ''NHTSA strongly consider the national consensus recommendations contained within the NSTSP [National School Transportation Specifications and Procedures] whenever they are relevant to the current NPRM.'' Our response to this comment is to explain that we had reviewed the NSTSP recommendations but did not find them applicable to this rulemaking. Those recommendations are developed by school bus purchasers and users; NHTSA's FMVSSs apply to school bus and equipment manufacture and these manufacturers are not directly involved in the development of the recommendations. Today's final rule do not apply to purchasers and users, but instead sets performance standards for school buses to which school bus manufacturers must certify compliance.

Executive Order 12988

With respect to the review of the promulgation of a new regulation, section 3(b) of Executive Order 12988, ''Civil Justice Reform'' (61 FR 4729, February 7, 1996) requires that Executive agencies make every reasonable effort to ensure that the regulation: (1) Clearly specifies the preemptive effect; (2) clearly specifies the effect on existing Federal law or regulation; (3) provides a clear legal standard for affected conduct, while promoting simplification and burden reduction; (4) clearly specifies the retroactive effect, if any; (5) adequately defines key terms; and (7) addresses other important issues affecting clarity and general draftsmanship under any guidelines issued by the Attorney General. This document is consistent with that requirement. The preemptive effect of this final rule has been discussed above. NHTSA notes further that there is no requirement that individuals submit a petition for reconsideration or pursue other administrative proceeding before they may file suit in court.

Unfunded Mandates Reform Act

The Unfunded Mandates Reform Act of 1995 requires agencies to prepare a written assessment of the costs, benefits and other effects of proposed or final rules that include a Federal mandate likely to result in the expenditure by State, local or tribal governments, in the aggregate, or by the private sector, of more than $100 million annually (adjusted for inflation with base year of 1995). This final rule will not result in expenditures by State, local or tribal governments, in the aggregate, or by the private sector in excess of $100 million annually.

Executive Order 13045

Executive Order 13045 (62 FR 19885, April 23, 1997) applies to any rule that: (1) Is determined to be ''economically significant'' as defined under E.O. 12866, and (2) concerns an environmental, health, or safety risk that NHTSA has reason to believe may have a disproportionate effect on children. This rulemaking is not subject to the Executive Order because it is not economically significant as defined in E.O. 12866.

Executive Order 13211

Executive Order 13211 (66 FR 28355, May 18, 2001) applies to any rulemaking that: (1) Is determined to be economically significant as defined under E.O. 12866, and is likely to have a significantly adverse effect on the supply of, distribution of, or use of energy; or (2) that is designated by the Administrator of the Office of Information and Regulatory Affairs as a significant energy action. This rulemaking is not subject to E.O. 13211.

Regulation Identifier Number (RIN)

The Department of Transportation assigns a regulation identifier number (RIN) to each regulatory action listed in the Unified Agenda of Federal Regulations. The Regulatory Information Service Center publishes the Unified Agenda in April and October of each year. You may use the RIN contained in the heading at the beginning of this document to find this action in the Unified Agenda.

Privacy Act

Anyone is able to search the electronic form of all comments received into any of our dockets by the name of the individual submitting the comment (or signing the comment, if submitted on behalf of an association, business, labor union, etc.). You may review DOT's complete Privacy Act Statement in the **Federal Register** published on April 11, 2000 (Volume 65, Number 70; Pages 19477–78).

List of Subjects in 49 CFR Part 571

Imports, Motor vehicle safety, Motor vehicles, and Tires.

■ In consideration of the foregoing, NHTSA amends 49 CFR Part 571 as set forth below.

PART 571—FEDERAL MOTOR VEHICLE SAFETY STANDARDS

■ 1. The authority citation for Part 571 continues to read as follows:

Authority: 49 U.S.C. 322, 30111, 30115, 30117 and 30166; delegation of authority at 49 CFR 1.50.

■ 2. Section 571.207 is amended by revising the introductory text of S4.2, to read as follows:

§ 571.207 Standard No. 207, Seating systems.

* * * * *

S4.2. *General performance requirements.* When tested in accordance with S5, each occupant seat shall withstand the following forces, in newtons, except for: a side-facing seat; a passenger seat on a bus other than a school bus; a passenger seat on a school bus with a GVWR greater than 4,536 kilograms (10,000 pounds); and, a passenger seat on a school bus with a GVWR less than or equal to 4,536 kg manufactured before October 21, 2011.

* * * * *

■ 3. Section 571.208 is amended by revising S4.4.3.3, revising the heading of S4.4.5 and revising S4.4.5.1, revising the table in S7.1.4, and adding S7.1.5, to read as follows:

§ 571.208 Standard No. 208, Occupant crash protection.

* * * * *

S4.4.3.3 *School buses with a gross vehicle weight rating of 4,536 kg (10,000 pounds) or less.*

(a) Each school bus with a gross vehicle weight rating of 4,536 kg (10,000 pounds) or less manufactured before October 21, 2011 must be equipped with an integral Type 2 seat belt assembly at the driver's designated seating position and at the right front passenger's designated seating position (if any), and with a Type 1 or Type 2 seat belt assembly at all other seating positions. Type 2 seat belt assemblies installed in compliance with this requirement must comply with Standard No. 209 (49 CFR 571.209) and with S7.1 and S7.2 of this standard. The lap belt portion of a Type 2 seat belt assembly installed at the driver's designated seating position and at the right front passenger's designated seating position (if any) must meet the requirements specified in S4.4.3.3(c).

(b) Each school bus with a gross vehicle weight rating of 4,536 kg (10,000 pounds) or less manufactured on or after October 21, 2011 must be equipped with an integral Type 2 seat belt assembly at all seating positions. The seat belt assembly at the driver's designated seating position and at the right front passenger's designated seating position (if any) shall comply with Standard No. 209 (49 CFR 571.209) and with S7.1 and S7.2 of this standard. The lap belt portion of a Type 2 seat belt assembly installed at the driver's designated seating position and at the right front passenger's designated seating position (if any) shall meet the requirements specified in S4.4.3.3(c). Type 2 seat belt assemblies installed on the rear seats of school buses must meet the requirements of S7.1.1.5, S7.1.5 and S7.2 of this standard.

(c) The lap belt portion of a Type 2 seat belt assembly installed at the driver's designated seating position and at the right front passenger's designated seating position (if any) shall include either an emergency locking retractor or an automatic locking retractor, which retractor shall not retract webbing to the next locking position until at least ¾ inch of webbing has moved into the retractor. In determining whether an automatic locking retractor complies with this requirement, the webbing is extended to 75 percent of its length and the retractor is locked after the initial adjustment. If a Type 2 seat belt assembly installed in compliance with this requirement incorporates any webbing tension-relieving device, the vehicle owner's manual shall include the information specified in S7.4.2(b) of this standard for the tension-relieving device, and the vehicle shall comply with S7.4.2(c) of this standard.

* * * * *

S4.4.5 *Buses with a GVWR of 10,000 lb (4,536 kg) or less, except school buses, manufactured on or after September 1, 2007.*

S4.4.5.1 Except as provided in S4.4.5.2, S4.4.5.3, S4.4.5.4, S4.4.5.5 and S4.4.5.6, each bus with a gross vehicle weight rating of 10,000 lb (4,536 kg) or less, except school buses, shall be equipped with a Type 2 seat belt assembly at every designated seating position other than a side-facing position. Type 2 seat belt assemblies installed in compliance with this requirement shall conform to Standard No. 209 (49 CFR 571.209) and with S7.1 and S7.2 of this standard. If a Type 2 seat belt assembly installed in compliance with this requirement incorporates a webbing tension relieving device, the vehicle owner's manual shall include the information specified in S7.4.2(b) of this standard for the tension relieving device, and the vehicle shall conform to S7.4.2(c) of this standard. Side-facing designated seating positions shall be equipped, at the manufacturer's option, with a Type 1 or Type 2 seat belt assembly.

* * * * *

S7.1.4 * * *

	50th-percentile 6-year-old child	50th-percentile 10-year-old child	5th-percentile adult female	50th-percentile adult male	95th-percentile adult male
Weight	47.3 pounds	82.1 pounds	102 pounds	164 pounds ±3	215 pounds.
Erect sitting height	25.4 inches	28.9 inches	30.9 inches	35.7 inches ±.1	38 inches.
Hip breadth (sitting)	8.4 inches	10.1 inches	12.8 inches	14.7 inches ±.7	16.5 inches.
Hip circumference (sitting).	23.9 inches	27.4 inches (standing).	36.4 inches	42 inches	47.2 inches.
Waist circumference (sitting).	20.8 inches	25.7 inches (standing).	23.6 inches	32 inches ±.6	42.5 inches.
Chest depth		6.0 inches	7.5 inches	9.3 inches ±.2	10.5 inches.
Chest circumference:					
(nipple)			30.5 inches.		
(upper)		26.3 inches	29.8 inches	37.4 inches ±.6	44.5 inches.
(lower)			26.6 inches.		

S7.1.5 *School bus bench seats.* The seat belt assemblies on school bus bench seats will operate by means of any emergency-locking retractor that conforms to 49 CFR 571.209 to restrain persons whose dimensions range from those of a 50th percentile 6-year-old child to those of a 50th percentile 10-year-old, for small occupant seating positions, as defined in 49 CFR 571.222, and to those of a 50th percentile adult male for all other seating positions. The seat back may be in any position.

* * * * *

■ 4. Section 571.210 is amended by revising S2; amending S3 by revising the heading and adding definitions for

''school bus torso belt adjusted height,'' ''school bus torso belt anchor point,'' and ''small occupant seating position,'' in alphabetical order; adding S4.1.3 and S4.1.3.1 through S4.1.3.5; by revising in the introductory paragraph of S4.3.2, the second sentence; revising S4.3.2(b) and by adding Figure 4 to the end of the section, to read as follows:

§ 571.210 Standard No. 210, Seat belt assembly anchorages.

* * * * *

S2. *Application.* This standard applies to passenger cars, multipurpose passenger vehicles, trucks, buses, and school buses.

S3. *Definitions.*

School bus torso belt adjusted height means the vertical height above the SgRP of the point at which the torso belt deviates more than 10 degrees from the horizontal plane when the torso belt is pulled away from the seat by a 20 N force at a location on the webbing approximately 100 mm from the adjustment device and the pulled portion of the webbing is held in a horizontal plane.

School bus torso belt anchor point means the midpoint of the torso belt width where the torso belt first contacts the uppermost torso belt anchorage.

* * * * *

Small occupant seating position is as defined in 49 CFR 571.222.

* * * * *

S4.1.3 *School bus passenger seats.*

S4.1.3.1 Except for seats with no other seats behind them, seat belt anchorages on school buses manufactured on or after October 21, 2011 must be attached to the school bus seat structure and the seat belt shall be Type 1 or Type 2 as defined in S3 of FMVSS No. 209 (49 CFR 571.209).

S4.1.3.2 Type 2 seat belt anchorages on school buses manufactured on or after October 21, 2011 must meet the following location requirements.

(a) As specified in Figure 4, the vertical distance from the seating reference point for the school bus torso belt anchor point must be fixed or adjustable to at least 400 mm for a small occupant seating position of a flexible occupancy seat, as defined in 49 CFR 571.222, and at least 520 mm above the SgRP for all other seating positions. The school bus torso belt adjusted height at each seating position shall, at a minimum, be adjustable from the torso belt anchor point to within at least 280 mm vertically above the SgRP to the minimum required vertical height of the school bus torso belt anchor point for that seating position.

(b) The minimum lateral distance between the vertical centerline of the bolt holes or the centroid of any other means of attachment to the structure specified in 4.1.3.1, simultaneously achievable by all seating positions, must be:

(i) 280 mm for seating positions in a flexible occupancy seat in a maximum occupancy configuration, as defined in 49 CFR 571.222; and

(ii) 330 mm for all other seating positions.

S4.1.3.3 School buses with a GVWR less than or equal to 4,536 kg (10,000 pounds) must meet the requirements of S4.2.2 of this standard.

S4.1.3.4 School buses with a GVWR greater than 4,536 kg (10,000 pounds) manufactured on or after October 21, 2011, with Type 1 seat belt anchorages, must meet the strength requirements specified in S4.2.1 of this standard.

S4.1.3.5 School buses with a GVWR greater than 4,536 kg (10,000 pounds) manufactured on or after October 21, 2011, with Type 2 seat belt anchorages, must meet the strength requirements specified in S4.2.2 of this standard.

* * * * *

S4.3.2 *Seat belt anchorages for the upper torso portion of Type 2 seat belt assemblies.* * * * Except a small occupant seating position as defined in 49 CFR 571.222, with the seat and seat back so positioned, as specified by subsection (a) or (b) of this section, the upper end of the upper torso restraint shall be located within the acceptable range shown in Figure 1, with reference to a two-dimensional drafting template described in Society of Automotive Engineers (SAE) Standard J826, revised May 1987, ''Devices for Use in Defining and Measuring Vehicle Seating Accommodation'' (incorporated by reference, see § 571.5). * * *

* * * * *

(b) Except for seating positions on school bus bench seats, compliance with this section shall be determined with adjustable anchorages at the midpoint of the adjustment range of all adjustable positions. For seating positions on school bus bench seats, place adjustable anchorages and torso belt height adjusters in their uppermost position.

* * * * *

BILLING CODE 4910–59–P

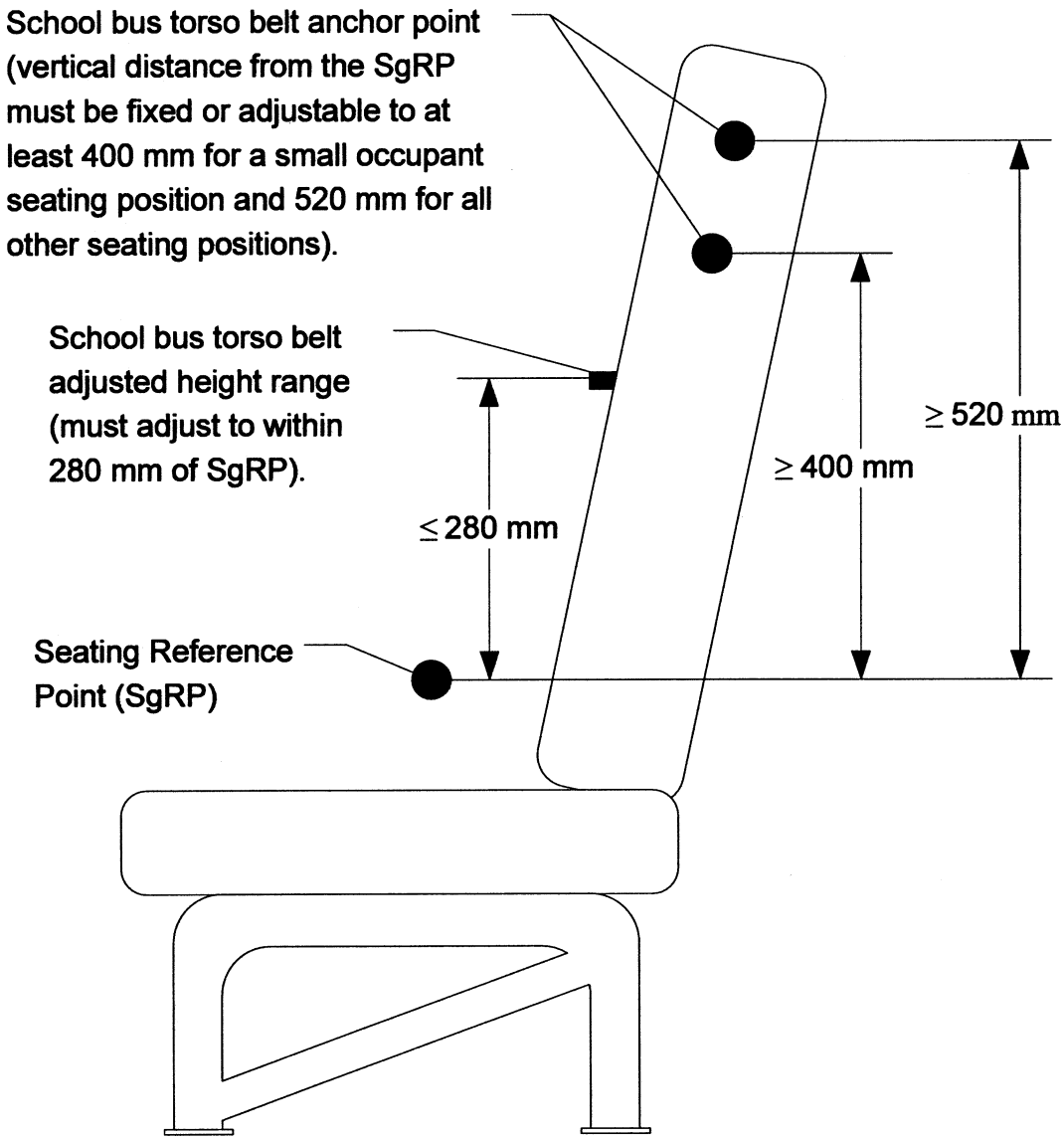

Figure 4 - Seat belt anchorage diagram

■ 5. Section 571.222 is amended by:

■ a. Adding to S4, in alphabetical order, definitions of ''fixed occupancy seat'', ''flexible occupancy seat'', ''maximum occupancy configuration'', ''minimum occupancy configuration'', ''seat bench width'' and ''small occupant seating position'';

■ b. Revising S4.1; revising, in S5, paragraphs (a) and (b); revising S5.1.2; revising S5.1.5; adding S5.1.6, S5.1.6.1 through S5.1.6.5, and S5.1.6.5.1 through S5.1.6.5.7; adding S5.1.7 through S5.1.7.2; revising S5.2.2; adding S5.5; and adding Figures 8 and 9 following Figure 7 at the end of the section.

The revisions and additions read as follows:

§ 571.222 Standard No. 222; School bus passenger seating and crash protection.

* * * * *

S4. *Definitions.*

* * * * *

Fixed occupancy seat means a bench seat equipped with Type 2 seat belts that has a permanent configuration regarding the number of seating positions on the seat. The number of seating positions on the bench seat cannot be increased or decreased.

Flexible occupancy seat means a bench seat equipped with Type 2 seat belts that can be reconfigured so that the number of seating positions on the seat can change. The seat has a minimum occupancy configuration and maximum occupancy configuration, and the number of passengers capable of being carried in the minimum occupancy configuration must differ from the number of passengers capable of being carried in the maximum occupancy configuration.

Maximum occupancy configuration means, on a bench seat equipped with Type 2 seat belts, an arrangement whereby the lap belt portion of the Type 2 seat belts is such that the maximum number of occupants can be belted.

Minimum occupancy configuration means, on a bench seat equipped with Type 2 seat belts, an arrangement whereby the lap belt portion of the Type 2 seat belts is such that the minimum number of occupants can be belted.

* * * * *

Seat bench width means the maximum transverse width of the bench seat cushion.

Small occupant seating position means the center seating position on a flexible occupancy seat in a maximum occupancy configuration, if the torso belt portion of the Type 2 seat belt is intended to restrain occupants whose dimensions range from those of a 50th percentile 6 year-old child only to those of a 50th percentile 10 year-old child and the torso belt anchor point cannot achieve a minimum height of 520 mm above the seating reference point, as specified by S4.1.3.2(a) of 49 CFR 571.210.

* * * * *

S4.1 *Determination of the number of seating positions and seat belt positions*

(a) The number of seating positions considered to be in a bench seat for vehicles manufactured before October 21, 2011 is expressed by the symbol W, and calculated as the seat bench width in millimeters divided by 381 and rounded to the nearest whole number.

(b) The number of seating positions and the number of Type 1 seat belt positions considered to be in a bench seat for vehicles manufactured on or after October 21, 2011 is expressed by the symbol W, and calculated as the seat bench width in millimeters divided by 380 and rounded to the nearest whole number.

(c) Except as provided in S4.1(d), the number of Type 2 seat belt positions on a flexible occupancy seat in a minimum occupancy configuration or a fixed occupancy seat for vehicles manufactured on or after October 21, 2011 is expressed by the symbol Y, and calculated as the seat bench width in millimeters divided by 380 and rounded to the next lowest whole number. The minimum seat bench width for a seat equipped with a Type 2 seat belt is 380 mm. See Table 1 for an illustration.

(d) A flexible occupancy seat meeting the requirements of S4.1(c) may also have a maximum occupancy configuration with Y +1 Type 2 seat belt positions, if the minimum seat bench width for this configuration is Y +1 times 330 mm. See Table 1 for an illustration.

(e) A flexible occupancy seat equipped with Type 2 seat belts in a maximum occupancy configuration may have up to one single small occupant seating position.

TABLE 1—NUMBER OF SEATING POSITIONS AS A FUNCTION OF SEAT BENCH WIDTH

Seating configuration	Seat bench width (mm)				
	380–659	660–759	760–989	990–1139	1140–1319
Minimum or Fixed Occupancy	1	1	2	2	3
Maximum Occupancy	1	2	2	3	3

S5. *Requirements.*

(a) *Large school buses.*

(1) Each school bus manufactured before October 21, 2011 with a gross vehicle weight rating of more than 4,536 kg (10,000 pounds) shall be capable of meeting any of the requirements set forth under this heading when tested under the conditions of S6. However, a particular school bus passenger seat (i.e., a test specimen) in that weight class need not meet further requirements after having met S5.1.2 and S5.1.5, or having been subjected to either S5.1.3, S5.1.4, or S5.3.

(2) Each school bus manufactured on or after October 21, 2011 with a gross vehicle weight rating of more than 4,536 kg (10,000 pounds) shall be capable of meeting any of the requirements set forth under this heading when tested under the conditions of S6 of this standard or § 571.210. However, a particular school bus passenger seat (i.e., a test specimen) in that weight class need not meet further requirements after having met S5.1.2 and S5.1.5, or having been subjected to either S5.1.3, S5.1.4, S5.1.6 (if applicable), or S5.3. If S5.1.6.5.5(b) is applicable, a particular test specimen need only meet S5.1.6.5.5(b)(1) or (2) as part of meeting S5.1.6 in its entirety. Each vehicle with voluntarily installed Type 1 seat belts and seat belt anchorages at W seating positions in a bench seat, voluntarily installed Type 2 seat belts and seat belt anchorages at Y seat belt positions in a fixed occupancy seat, or voluntarily installed Type 2 seat belts and seat belt anchorages at Y and Y + 1 seat belt positions in a flexible occupancy seat, shall also meet the requirements of:

(i) S4.4.3.3 of Standard No. 208 (49 CFR 571.208);

(ii) Standard No. 209 (49 CFR 571.209), as they apply to school buses; and,

(iii) Standard No. 210 (49 CFR 571.210) as it applies to school buses with a gross vehicle weight rating greater than 10,000 pounds.

(b) *Small school buses.* Each vehicle with a gross vehicle weight rating of 4,536 kg (10,000 pounds) or less shall be capable of meeting the following requirements at all seating positions:

(1)(i) In the case of vehicles manufactured before September 1, 1991, the requirements of §§ 571.208, 571.209, and 571.210 as they apply to multipurpose passenger vehicles;

(ii) In the case of vehicles manufactured on or after September 1, 1991, the requirements of S4.4.3.3 of § 571.208 and the requirements of §§ 571.209 and 571.210 as they apply to school buses with a gross vehicle weight rating of 4,536 kg or less;

(iii) In the case of vehicles manufactured on or after October 21, 2011 the requirements of S4.4.3.3(b) of § 571.208 and the requirements of §§ 571.207, 571.209 and 571.210 as they apply to school buses with a gross vehicle weight rating of 4,536 kg or less; and,

(2) The requirements of S5.1.2, S5.1.3, S5.1.4, S5.1.5, S5.1.6, S5.1.7, S5.3, S5.4 and S5.5 of this standard. However, the requirements of §§ 571.208 and 571.210 shall be met at Y seat belt positions in a fixed occupancy seat, and at Y and Y + 1 seat belt positions for a flexible occupancy seat. A particular school bus passenger seat (i.e. a test specimen) in that weight class need not meet further requirements after having met S5.1.2 and S5.1.5, or after having been subjected to either S5.1.3, S5.1.4, S5.1.6, or S5.3 of this standard or § 571.207, § 571.210 or § 571.225.

* * * * *

S5.1.2 *Seat back height, position, and surface area.*

(a) For school buses manufactured before October 21, 2009, each school bus passenger seat must be equipped with a seat back that has a vertical height of at least 508 mm (20 inches) above the seating reference point. Each school bus passenger seat must be equipped with a seat back that, in the front projected view, has front surface area above the horizontal plane that passes through the seating reference point, and below the horizontal plane 508 mm (20 inches) above the seating reference point, of not less than 90

percent of the seat bench width in millimeters multiplied by 508.

(b) For school buses manufactured on or after October 21, 2009, each school bus passenger seat must be equipped with a seat back that has a vertical height of at least 610 mm (24 inches) above the seating reference point. The minimum total width of the seat back at 610 mm (24 inches) above the seating reference point shall be 75 percent of the maximum width of the seat bench. Each school bus passenger seat must be equipped with a seat back that, in the front projected view, has front surface area above the horizontal plane that passes through the seating reference point, and below the horizontal plane 610 mm (24 inches) above the seating reference point, of not less than 90 percent of the seat bench width in millimeters multiplied by 610.

* * * * *

S5.1.5 *Seat cushion retention.*

(a) *Seat cushion latching.* For school buses manufactured on or after October 21, 2009, school bus passenger seat cushions equipped with attachment devices that allow for the seat cushion to be removable without tools or to flip up must have a self-latching mechanism that is activated when a 22-kg (48.4-pound) mass is placed on the center of the seat cushion with the seat cushion in the down position.

(b) *Seat cushion retention.* In the case of school bus passenger seats equipped with seat cushions, with all manual attachment devices between the seat and the seat cushion in the manufacturer's designated position for attachment, the seat cushion shall not separate from the seat at any attachment point when subjected to an upward force in newtons of 5 times the mass of the seat cushion in kilograms and multiplied by 9.8 m/s^2, applied in any period of not less than 1 nor more than 5 seconds, and maintained for 5 seconds.

S5.1.6 *Quasi-static test of compartmentalization and Type 2 seat belt performance.* This section applies to school buses manufactured on or after October 21, 2011 with a gross vehicle weight rating expressed in the first column of Tables 2 through 4, and that are equipped with Type 2 seat belt assemblies.

(a) Except as provided in S5.1.6(b), when tested under the conditions of S5.1.6.5.1 through S5.1.6.5.6, the criteria specified in S5.1.6.1 and S5.1.6.2 must be met.

(b) A school bus passenger seat that does not have another seat behind it is not loaded with the upper and lower loading bars as specified in S5.1.6.5.2, S5.1.6.5.3, and S5.1.6.5.7 and is excluded from the requirements of S5.1.6.1(b).

S5.1.6.1 *Displacement limits.* In Tables 2 and 3, AH is the height in millimeters of the school bus torso belt anchor point specified by S4.1.3.2(a) of Standard No. 210 (49 CFR 571.210) and Φ is the angle of the posterior surface of the seat back defined in S5.1.6.3 of this standard.

(a) Any school bus torso belt anchor point, as defined in S3 of Standard No. 210, must not displace horizontally forward from its initial position (when Φ was determined) more than the value in millimeters calculated from the following expression in the second column of Table 2:

TABLE 2—TORSO BELT ANCHOR POINT DISPLACEMENT LIMIT

Gross vehicle weight rating	Displacement limit in millimeters
More than 4,536 kg (10,000 pounds).	(AH + 100) (tanΦ + 0.242/cosΦ)
Less than or equal to 4,536 kg (10,000 pounds).	(AH + 100) (tanΦ + 0.356/cosΦ)

(b) A point directly rearward of any school bus torso belt anchor point, as defined in S3 of Standard No. 210 (49 CFR 571.210) on the rear facing surface of the seat back, must not displace horizontally forward from its initial position (when Φ was determined) more than the value in millimeters calculated from the following expression in the second column of Table 3:

TABLE 3—SEAT BACK POINT DISPLACEMENT LIMIT

Gross vehicle weight rating	Displacement limit in millimeters
More than 4,536 kg (10,000 pounds).	(AH + 100) (tanΦ + 0.174/cosΦ)
Less than or equal to 4,536 kg (10,000 pounds).	(AH + 100) (tanΦ + 0.259/cosΦ)

S5.1.6.2 *Slippage of device used to achieve torso belt adjusted height.* If the torso belt adjusted height, as defined in S3 of Standard No. 210 (49 CFR 571.210), is achieved without the use of an adjustable torso belt anchorage, the adjustment device must not slip more than 25 mm (1.0 inches) along the webbing or guide material upon which it moves for the purpose of adjusting the torso belt height.

S5.1.6.3 *Angle of the posterior surface of a seat back.* If the seat back inclination is adjustable, the seat back is placed in the manufacturer's normal design riding position. If such a position is not specified, the seat back is positioned so it is in the most upright position. Position the loading bar specified in S6.5 of this standard so that it is laterally centered behind the seat back with the bar's longitudinal axis in a transverse plane of the vehicle in a horizontal plane within ± 6 mm (0.25 inches) of the horizontal plane passing through the seating reference point and move the bar forward against the seat back until a force of 44 N (10 pounds) has been applied. Position a second loading bar as described in S6.5 of this standard so that it is laterally centered behind the seat back with the bar's longitudinal axis in a transverse plane of the vehicle and in the horizontal plane 406 ± 6 mm (16 ± 0.25 inches) above the seating reference point, and move the bar forward against the seat back until a force of 44 N (10 pounds) has been applied. Determine the angle from vertical of a line in the longitudinal vehicle plane that passes through the geometric center of the cross-section of each cylinder, as shown in Figure 8. That angle is the angle of the posterior surface of the seat back.

S5.1.6.4 The seat back must absorb 452W joules of energy when subjected to the force specified in S5.1.6.5.7.

S5.1.6.5 *Quasi-static test procedure.*

S5.1.6.5.1 Adjust the seat back as specified in S5.1.6.3. Place all torso anchor points in their highest position of adjustment. If the torso belt adjusted height, as defined in S3 of FMVSS No. 210, is achieved by a method other than an adjustable anchor point, initially place the torso belt adjusted height at its highest position. Then move the adjustment device 38 mm (1.5 inches) downward with respect to its webbing or guide material.

S5.1.6.5.2 Position the lower loading bar specified in S6.5 of this standard so that it is laterally centered behind the seat back with the bar's longitudinal axis in a transverse plane of the vehicle and in any horizontal plane between 102 mm (4 inches) above and 102 mm (4 inches) below the seating reference point of the school bus passenger seat behind the test specimen. Position the upper loading bar described in S6.5 so that it is laterally centered behind the seat back with the bar's longitudinal axis in a transverse plane of the vehicle and in the horizontal plane 406 mm (16 inches) above the seating reference point of the school bus passenger seat behind the test specimen.

S5.1.6.5.3 Apply a force of 3,114W N (700W pounds) horizontally in the forward direction through the lower loading bar specified at S6.5 at the pivot attachment point. Reach the specified

load in not less than 5 and not more than 30 seconds. No sooner than 1.0 second after attaining the required force, reduce that force to 1,557W N (350W pounds) and maintain the pivot point position of the loading bar at the position where the 1,557W N (350W pounds) is attained until the completion of S5.1.6.5.7 of this standard.

S5.1.6.5.4 Position the body block specified in Figure 3 of FMVSS No. 210 (49 CFR 571.210) under each torso belt (between the torso belt and the seat back) in the passenger seat and apply a preload force of 600 ± 50 N (135 ± 11 pounds) on each body block in a forward direction parallel to the longitudinal centerline of the vehicle pursuant to the specifications of Standard No. 210 (49 CFR 571.210). After preload application is complete, the origin of the 203 mm body block radius at any point across the 102 mm body block thickness shall lie within the zone defined by S5.1.6.5.4(a) and S5.1.6.5.4(b) as shown in Figure 9:

(a) At or rearward of a transverse vertical plane of the vehicle located 100 mm longitudinally forward of the seating reference point.

(b) Within 75 mm of the horizontal plane located midway between the horizontal plane passing through the school bus torso belt adjusted height, specified in S3 of Standard No. 210 (49 CFR 571.210), and the horizontal plane 100 mm below the seating reference point.

S5.1.6.5.5 *Load application.*

(a) *Fixed Occupancy Seat.* For school buses with the gross vehicle weight rating listed in the first column of Table 4, if the expression in the second column is true, simultaneously apply the force listed in the third column to each body block.

TABLE 4—TORSO BODY BLOCK FORCES FOR FIXED OCCUPANCY SEATS

Gross vehicle weight rating	True expression	Applied force
More than 4,536 kg (10,000 pounds)	((seat bench width in mm)—(380Y)) ≤ 25 mm (1 inch).	3,300 N (742 pounds).
More than 4,536 kg (10,000 pounds)	((seat bench width in mm)—(380Y)) > 25 mm (1 inch).	5,000 N (1,124 pounds).
Less than or equal to 4,536 kg (10,000 pounds).	((seat bench width in mm)—(380Y)) ≤ 25 mm (1 inch).	5,000 N (1,124 pounds).
Less than or equal to 4,536 kg (10,000 pounds).	((seat bench width in mm)—(380Y)) > 25 mm (1 inch).	7,500 N (1,686 pounds).

(b) *Flexible Occupancy Seat.*

(1) For school buses with the gross vehicle weight rating listed in the first column of Table 5 and a bench seat in the maximum occupancy configuration for a flexible occupancy seat of Y+1 seat belt positions as specified in S4.1(d), simultaneously apply the force listed in the second column of Table 5 to each body block.

TABLE 5—TORSO BODY BLOCK FORCES IN MAXIMUM OCCUPANCY CONFIGURATION

Gross vehicle weight rating	Applied force
More than 4,536 kg (10,000 pounds).	3,300 N (742 pounds).
Less than or equal to 4,536 kg (10,000 pounds).	5,000 N (1,124 pounds).

(2) For a flexible occupancy seat in the minimum occupant configuration, apply the forces to each body block as specified in S5.1.6.5.5(a).

S5.1.6.5.6 Reach the specified load in not less than 5 and not more than 30 seconds. While maintaining the load, measure the school bus torso belt anchor point and seat back point horizontal displacement and then remove the body block.

S5.1.6.5.7 Move the upper bar forward against the seat back until a force of 44 N has been applied. Apply an additional force horizontally in the forward direction through the upper bar until 452W joules of energy have been absorbed in deflecting the seat back. The maximum travel of the pivot attachment point for the upper loading bar shall not exceed 356 mm as measured from the position at which the initial application of 44 N of force is attained and the maximum load must stay below the upper boundary of the force/deflection zone in Figure 1. Apply the additional load in not less than 5 seconds and not more than 30 seconds. Maintain the pivot attachment point at the maximum forward travel position for not less than 5 seconds, and not more than 10 seconds and release the load in not less than 5 seconds and not more than 30 seconds. (For the determination of S5.1.6.5.7, the energy calculation describes only the force applied through the upper loading bar, and the forward and rearward travel distance of the upper loading bar pivot attachment point measured from the position at which the application in this section of 44 N of force is attained.)

S5.1.7 *Buckle side length limit.* This section applies to rear passenger seats on school buses manufactured on or after October 21, 2011 that are equipped with Type 1 or Type 2 seat belt assemblies. All portions of the buckle/latchplate assembly must remain rearward of the limit plane defined in S5.1.7.1 when tested under the conditions of S5.1.7.2.

S5.1.7.1 *Buckle/latchplate limit plane.* Establish a transverse limit plane 65 mm from the SgRP that is perpendicular to a transverse plane that passes through the SgRP at an angle of 50 degrees to the horizontal.

S5.1.7.2 *Load application.* Insert the seat belt latchplate into the seat belt buckle. Apply a 20 N load to the buckle/latchplate assembly whose vector is in a vertical longitudinal plane. Apply the load along the centerline of the webbing attached to the latchplate at least 100mm from the nearest point on the latchplate. The load may be applied at any angle in the range of 30 to 75 degrees from horizontal.

* * * * *

S5.2.2 *Barrier height, position, and rear surface area.* The position and rear surface area of the restraining barrier shall be such that, in a front projected view of the bus, each point of the barrier's perimeter coincides with or lies outside of the perimeter of the minimum seat back area required by S5.1.2 for the seat immediately rearward of the restraining barrier.

* * * * *

S5.5 *Labeling.*

(a) A small occupant seating position must be permanently and legibly marked or labeled with the phrase: ''Do Not Sit In Middle Seat If Over Age 10''. The phrase must be comprised of no more than two lines of text. The label must be placed on the torso belt portion of the Type 2 seat belt. It must be plainly visible and easily readable when the seat belt is in a stored position. The

distance from the top edge of the top line of text to the bottom edge of the bottom line of text must be at least 35 mm. If the label is sewn on, it must be stitched around its entire perimeter.

(b) [Reserved]

* * * * *

BILLING CODE 4910–59–P

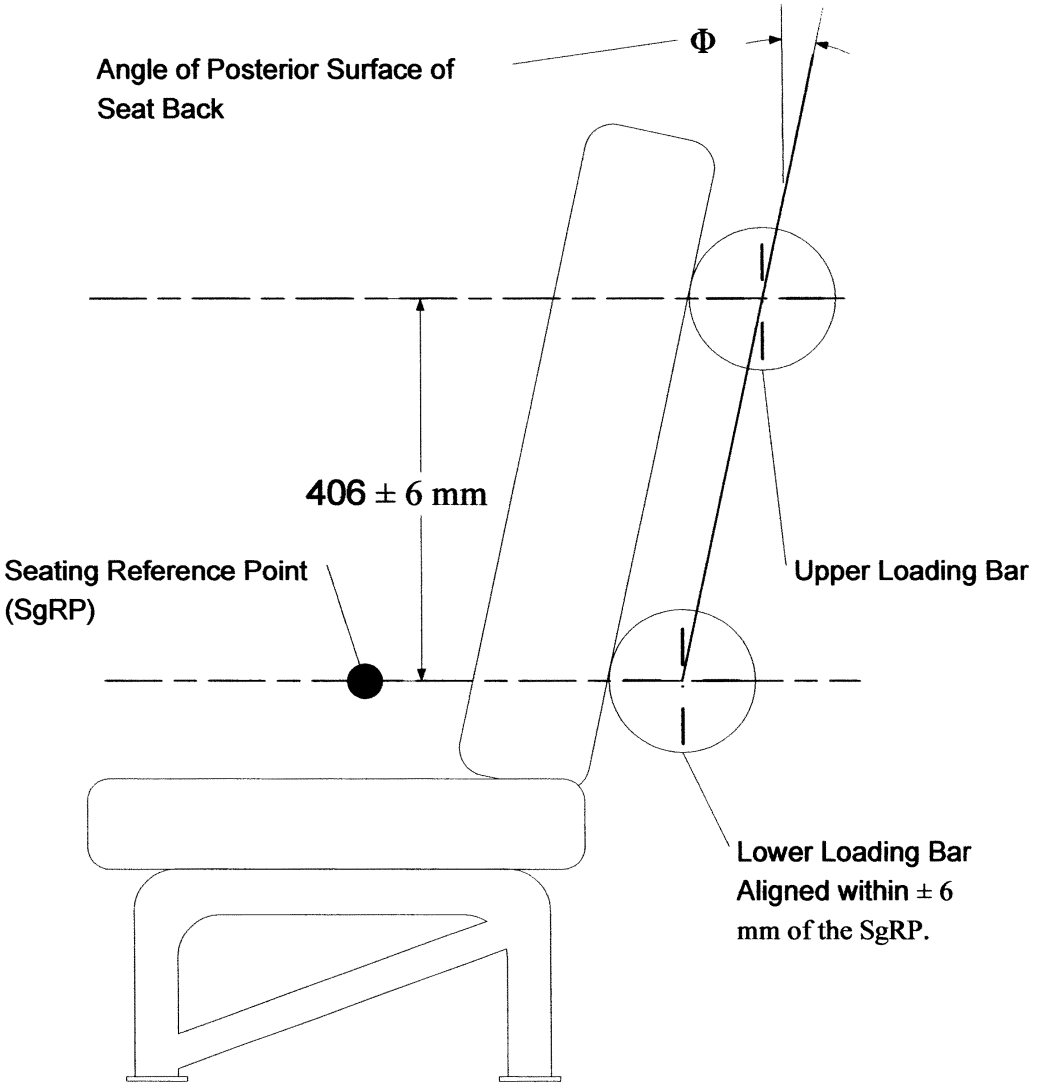

Figure 8 – Definition of initial angle of compartmentalizing seat back surface

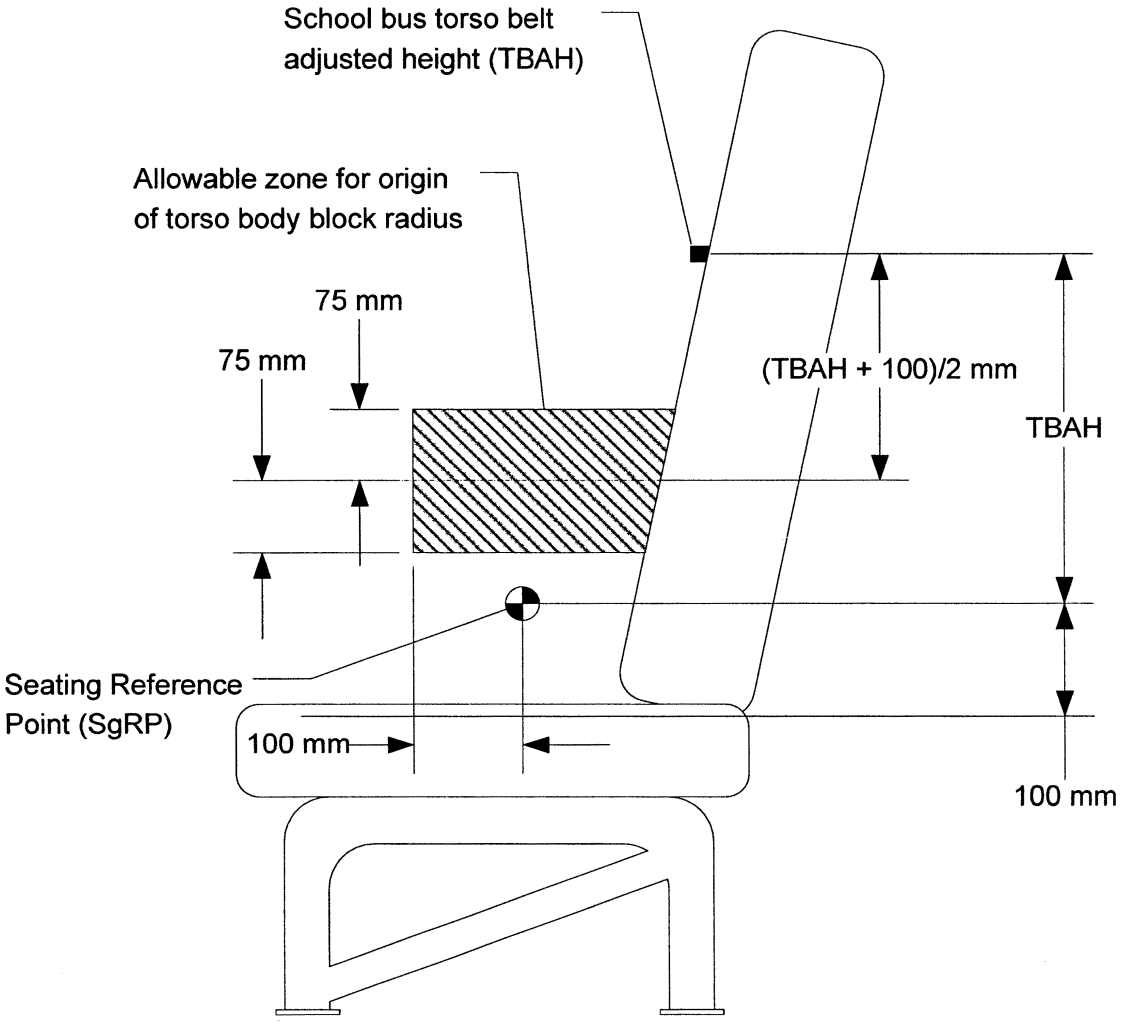

Figure 9 – Torso Block Zone

Issued on: October 14, 2008.

David Kelly,

Acting Administrator.

[FR Doc. E8–24755 Filed 10–15–08; 4:15 pm]

BILLING CODE 4910–59–C