(2) Each zone involved is simultaneously protected by the same detector and extinguishing system.

(c) EWIS that are part of each fire or overheat detector system in a fire zone must meet the requirements of § 25.1203.

§ 25.1733 Fire detector systems, general: EWIS.

EWIS associated with any installed fire protection system, including those required by §§ 25.854 and 25.858, must be considered an integral part of the system in showing compliance with the applicable requirements for that system.

APPENDIX A TO PART 25

Appendix A

FIGURE 1—Basic landing gear dimension data.

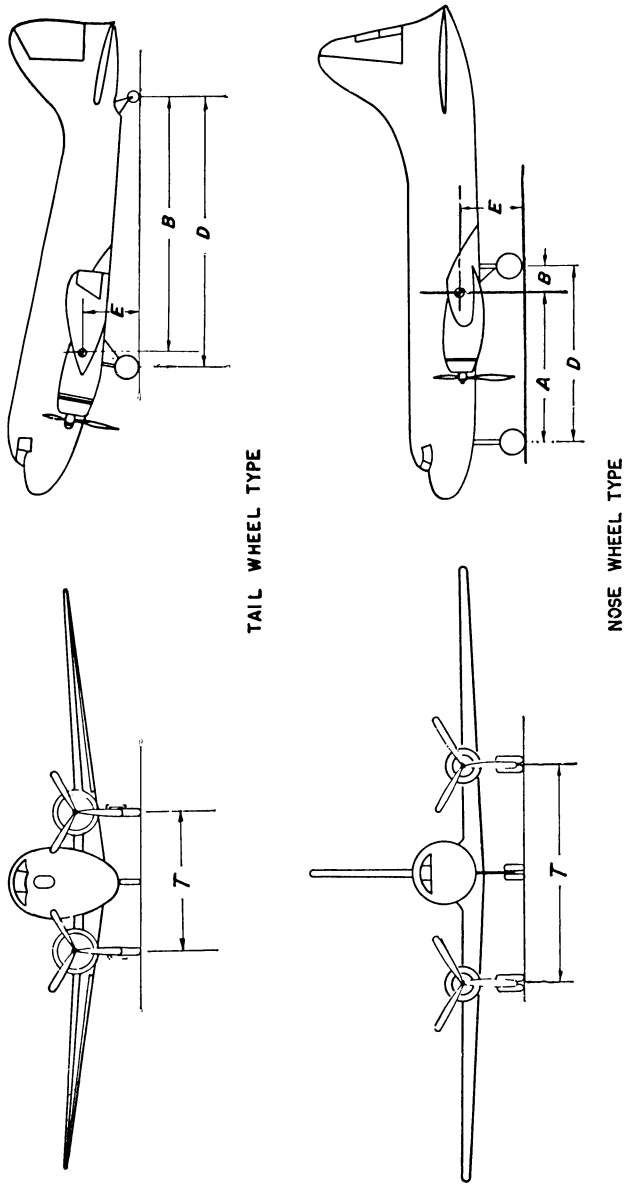

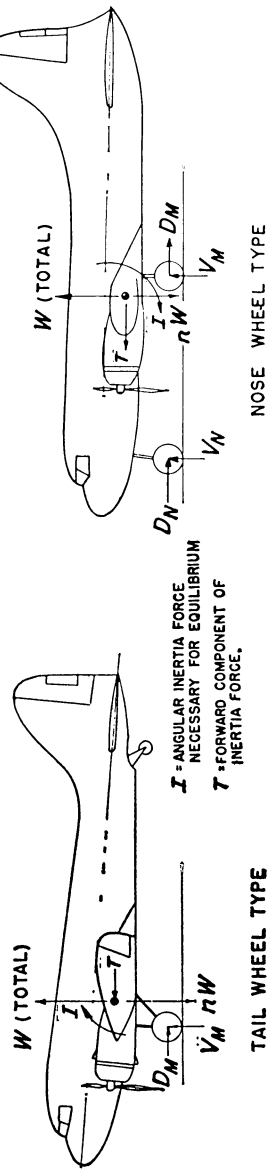

FIGURE 2—Level landing.

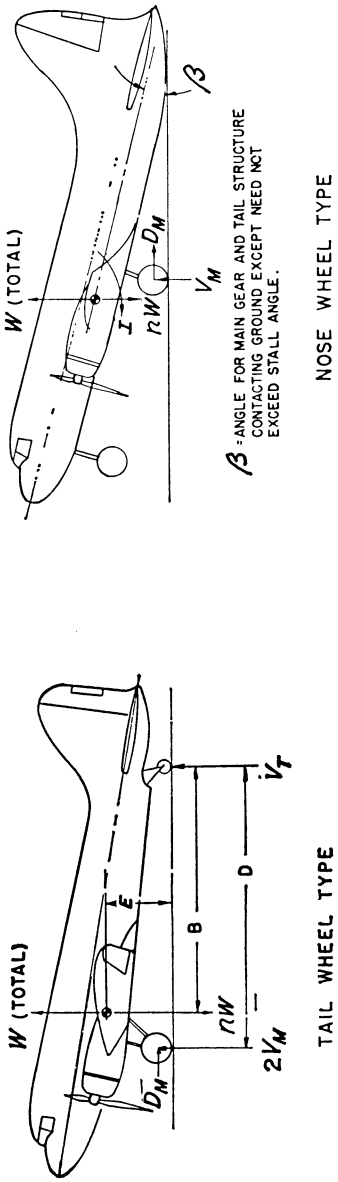

FIGURE 3—Tail-down landing.

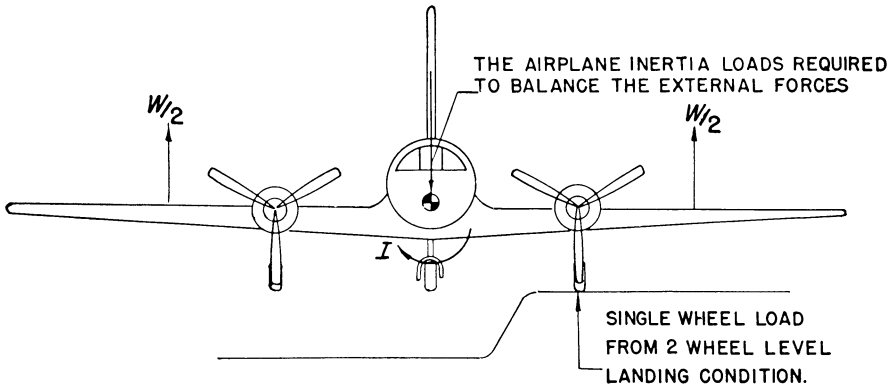

NOSE OR TAIL WHEEL TYPE

FIGURE 5—Lateral drift landing.

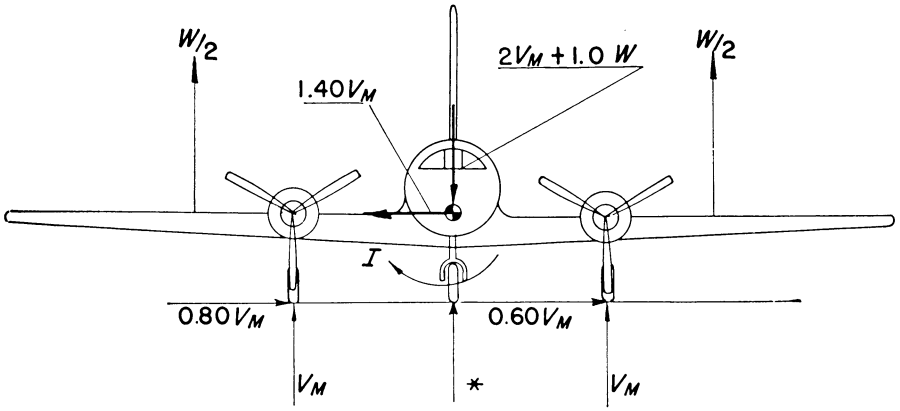

NOSE OR TAIL WHEEL TYPE AIRPLANE IN LEVEL ALTITUDE

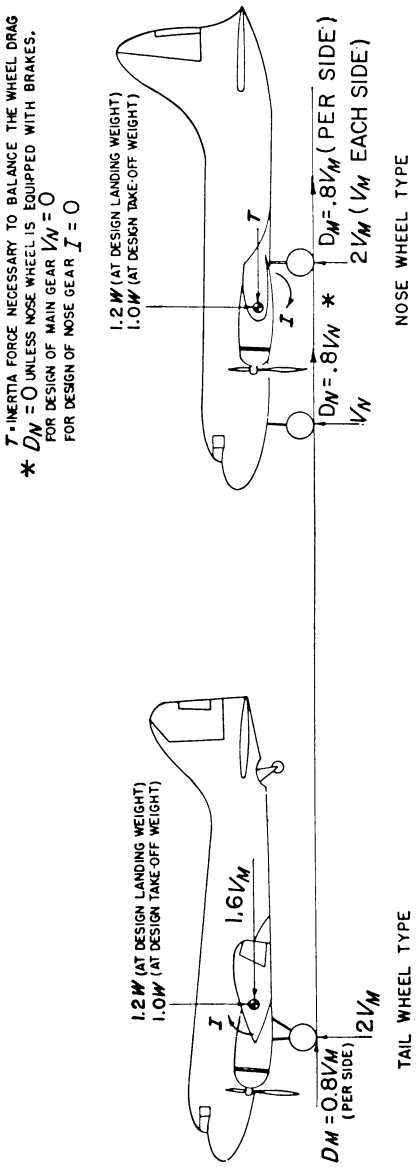

FIGURE 6—Braked roll.

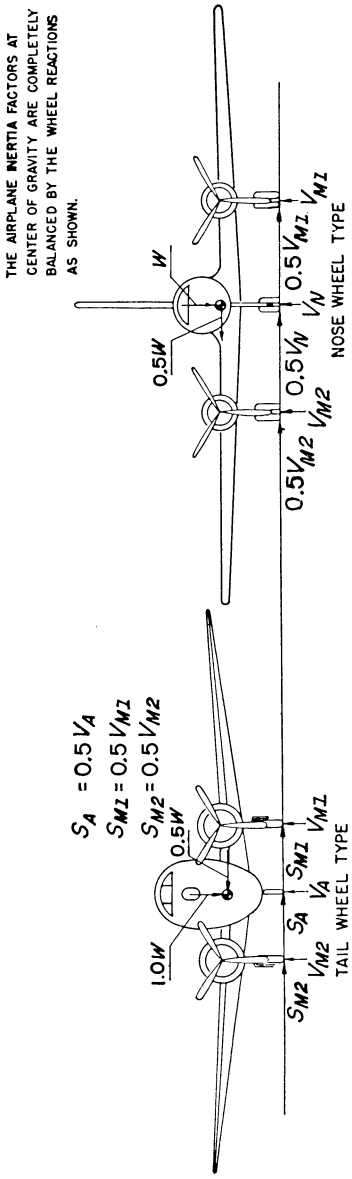

FIGURE 7—Ground turning.

FIGURE 8—Pivoting, nose or tail wheel type.

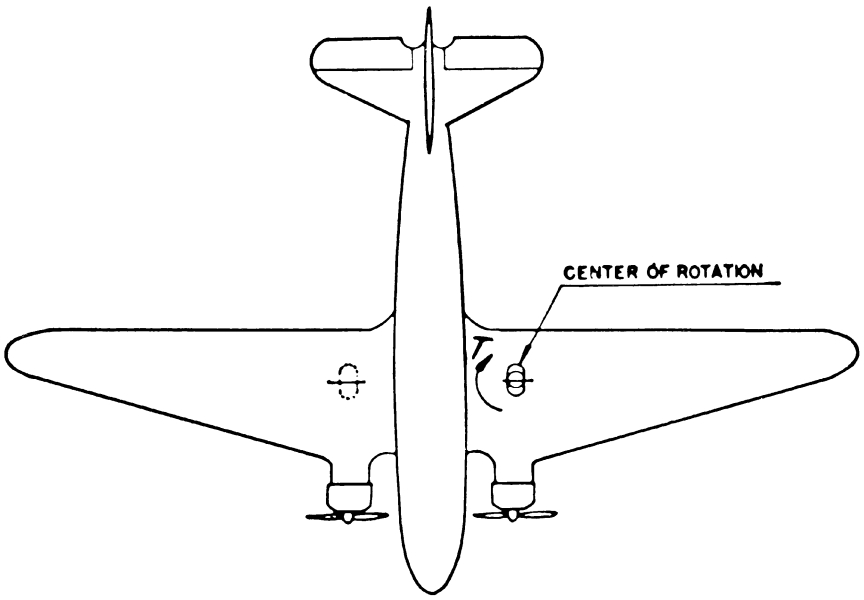

V_N and V_M are static ground reactions. For tail wheel type the airplane is in the three point attitude. Pivoting is assumed to take place about one main landing gear unit.

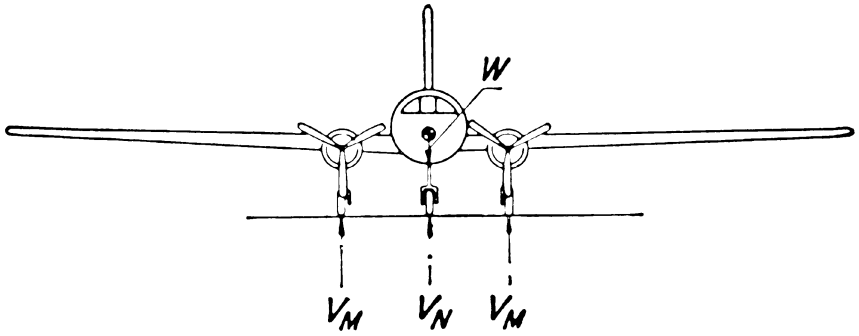

APPENDIX B TO PART 25

Appendix B

FIGURE 1—Pictorial definition of angles, dimensions, and directions on a seaplane

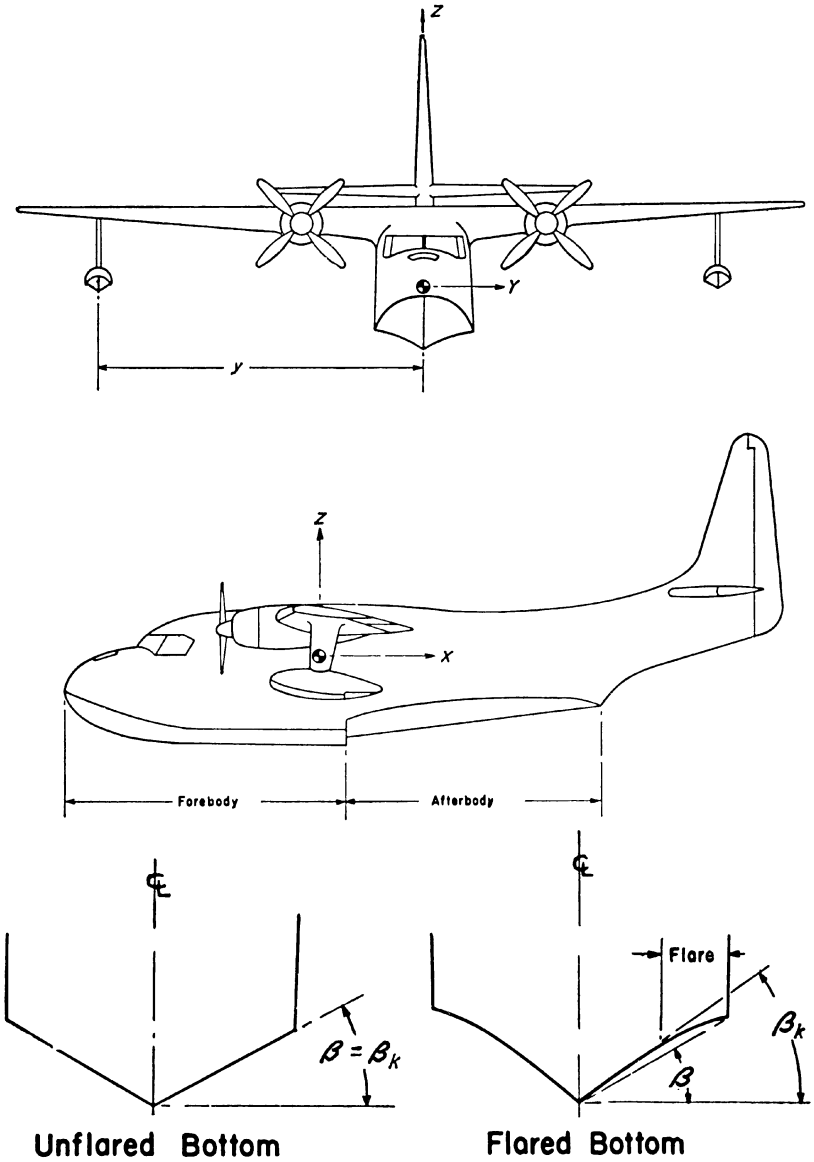

FIGURE 2—Hull station weighing factor.

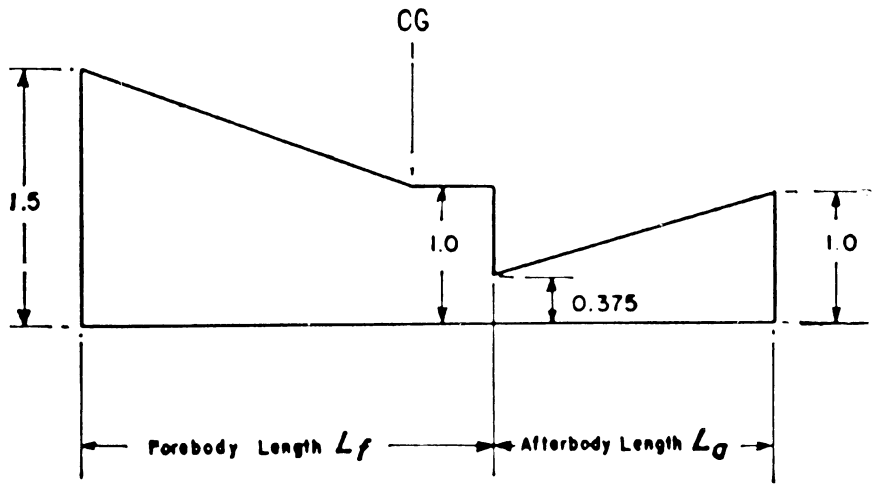

K_1 (Vertical Loads)

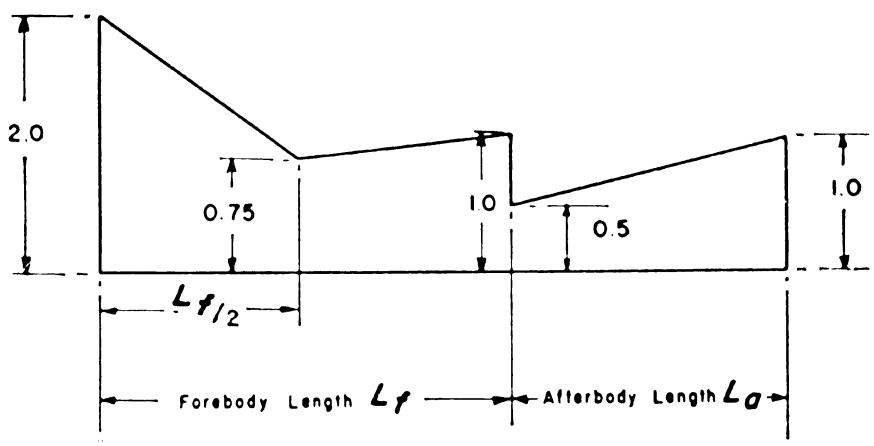

K_2 (Bottom Pressures)

FIGURE 3—Transverse pressure distributions.

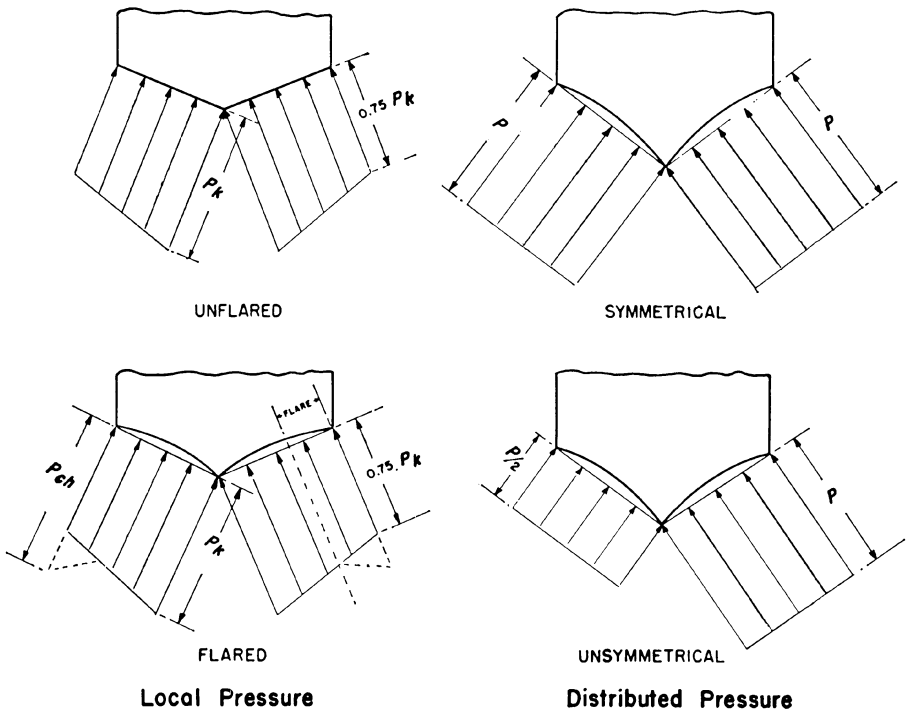

APPENDIX C TO PART 25

Part I—Atmospheric Icing Conditions

(a) *Continuous maximum icing.* The maximum continuous intensity of atmospheric icing conditions (continuous maximum icing) is defined by the variables of the cloud liquid water content, the mean effective diameter of the cloud droplets, the ambient air temperature, and the interrelationship of these three variables as shown in figure 1 of this appendix. The limiting icing envelope in terms of altitude and temperature is given in figure 2 of this appendix. The inter-relationship of cloud liquid water content with drop diameter and altitude is determined from figures 1 and 2. The cloud liquid water content for continuous maximum icing conditions of a horizontal extent, other than 17.4 nautical miles, is determined by the value of liquid water content of figure 1, multiplied by the appropriate factor from figure 3 of this appendix.

(b) *Intermittent maximum icing.* The intermittent maximum intensity of atmospheric icing conditions (intermittent maximum icing) is defined by the variables of the cloud liquid water content, the mean effective diameter of the cloud droplets, the ambient air temperature, and the interrelationship of these three variables as shown in figure 4 of this appendix. The limiting icing envelope in terms of altitude and temperature is given in figure 5 of this appendix. The inter-relationship of cloud liquid water content with drop diameter and altitude is determined from figures 4 and 5. The cloud liquid water content for intermittent maximum icing conditions of a horizontal extent, other than 2.6 nautical miles, is determined by the value of cloud liquid water content of figure 4 multiplied by the appropriate factor in figure 6 of this appendix.

FIGURE 1

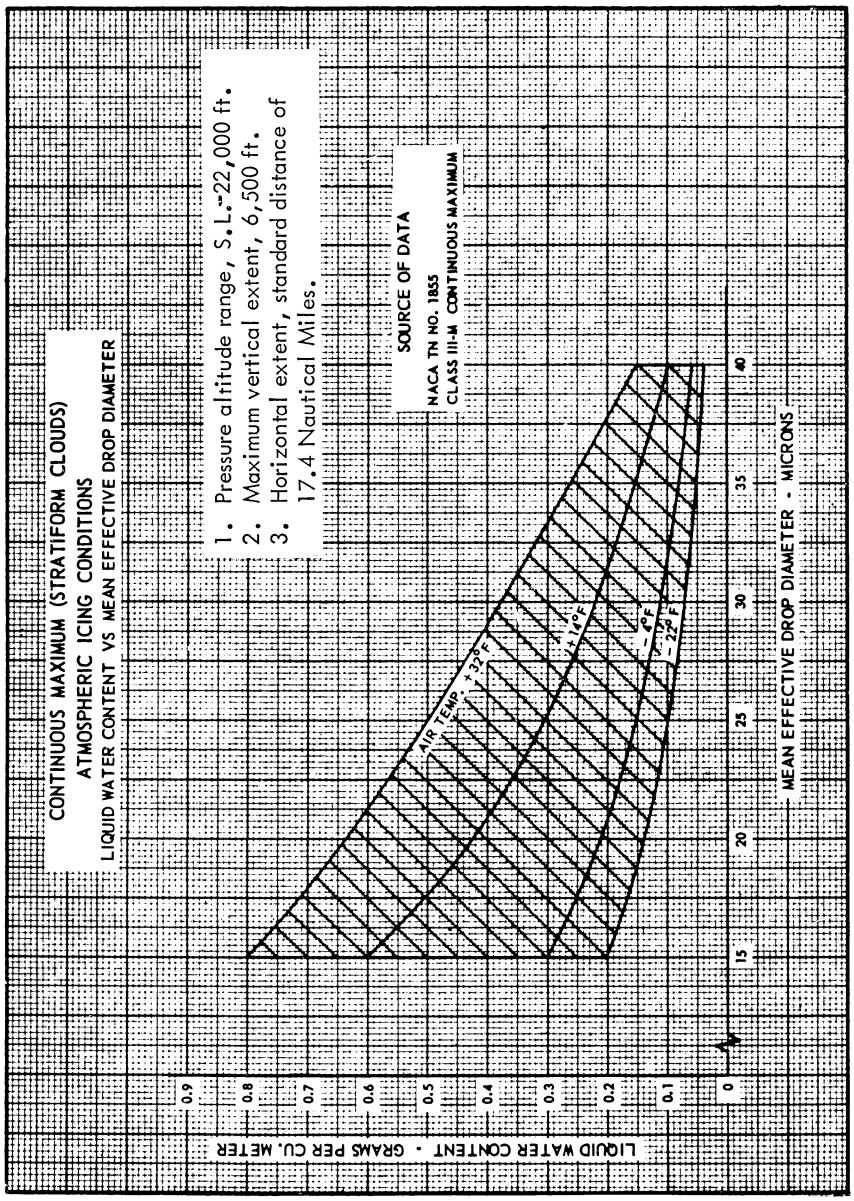
CONTINUOUS MAXIMUM (STRATIFORM CLOUDS)
ATMOSPHERIC ICING CONDITIONS
LIQUID WATER CONTENT VS MEAN EFFECTIVE DROP DIAMETER
1. Pressure altitude range, S.L.-22,000 ft.
2. Maximum vertical extent, 6,500 ft.
3. Horizontal extent, standard distance of 17.4 Nautical Miles.
SOURCE OF DATA
NACA TN NO. 1855
CLASS III-M CONTINUOUS MAXIMUM
AIR TEMP. +35°F
+16°F
-4°F
-22°F
LIQUID WATER CONTENT - GRAMS PER CU. METER
0.9
0.8
0.7
0.6
0.5
0.4
0.3
0.2
0.1
0
15
20
25
30
35
40
MEAN EFFECTIVE DROP DIAMETER - MICRONS

FIGURE 2

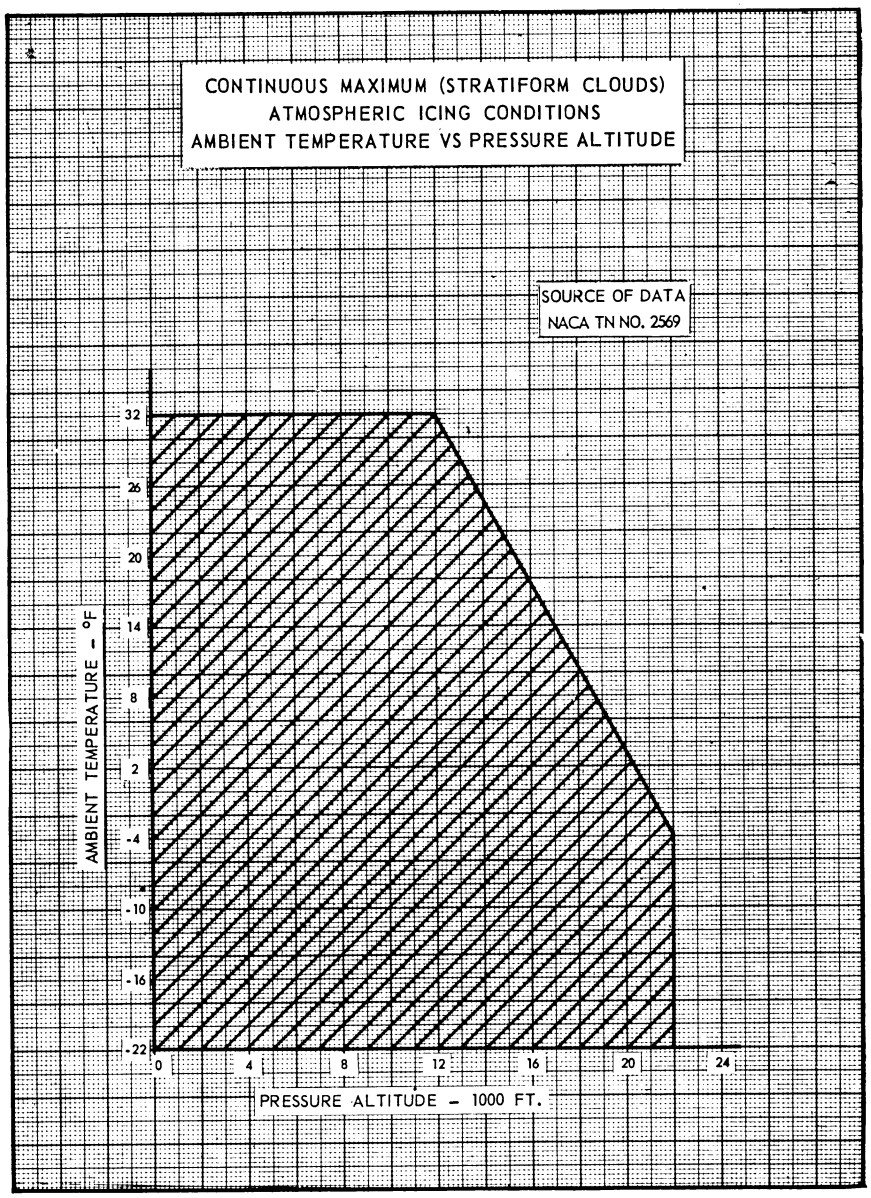
CONTINUOUS MAXIMUM (STRATIFORM CLOUDS)
ATMOSPHERIC ICING CONDITIONS
AMBIENT TEMPERATURE VS PRESSURE ALTITUDE
SOURCE OF DATA
NACA TN NO. 2569
AMBIENT TEMPERATURE - °F
32
26
20
14
8
2
-4
-10
-16
-22
0
4
8
12
16
20
24
PRESSURE ALTITUDE - 1000 FT.

FIGURE 3

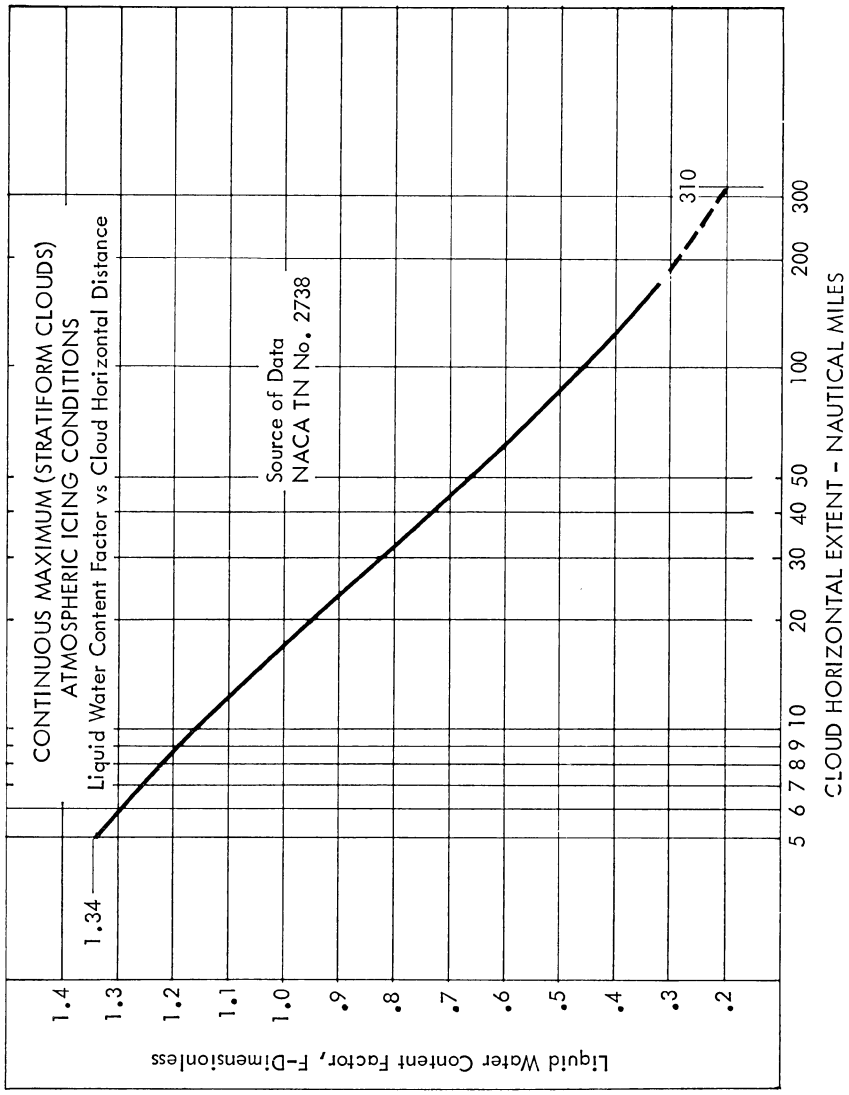
CONTINUOUS MAXIMUM (STRATIFORM CLOUDS)
ATMOSPHERIC ICING CONDITIONS
Liquid Water Content Factor vs Cloud Horizontal Distance
Source of Data
NACA TN No. 2738
1.34
310
Liquid Water Content Factor, F-Dimensionless
1.4
1.3
1.2
1.1
1.0
.9
.8
.7
.6
.5
.4
.3
.2
5 6 7 8 9 10 20 30 40 50 100 200 300
CLOUD HORIZONTAL EXTENT - NAUTICAL MILES

FIGURE 4

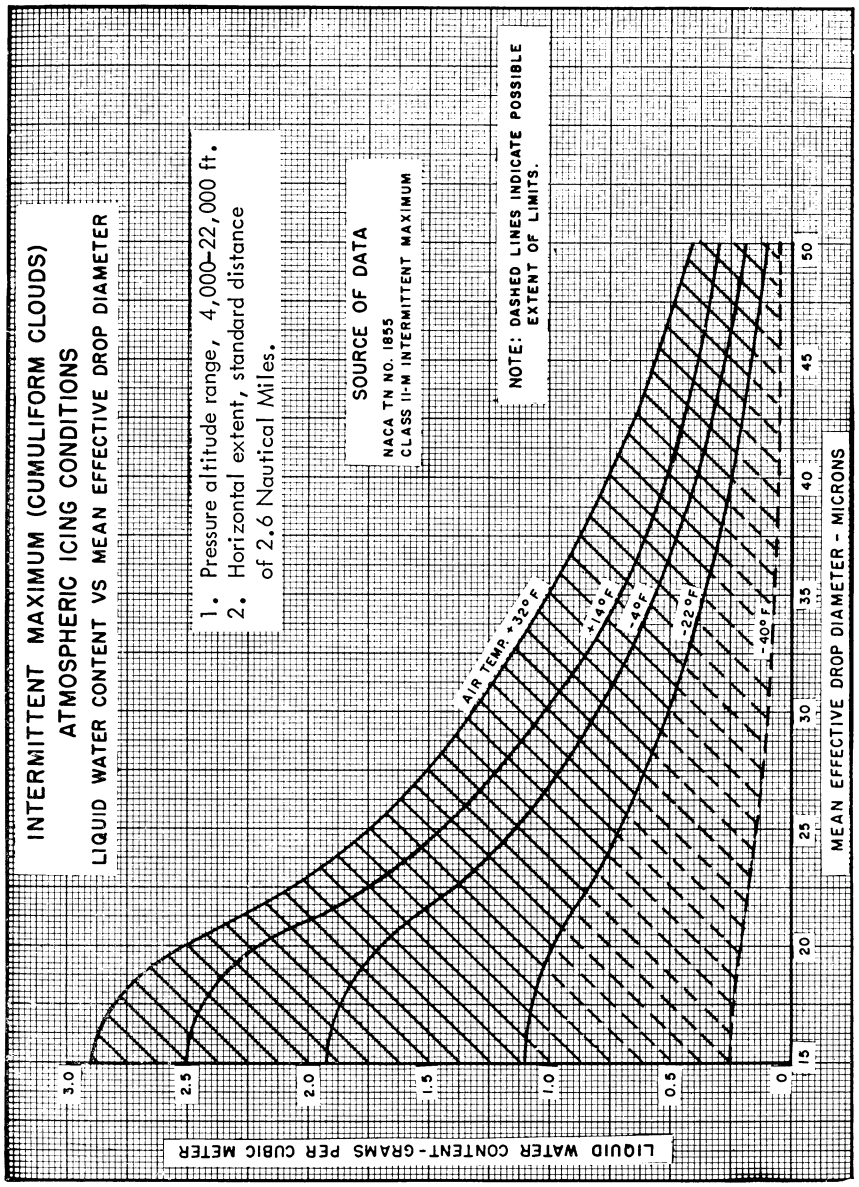
INTERMITTENT MAXIMUM (CUMULIFORM CLOUDS)
ATMOSPHERIC ICING CONDITIONS
LIQUID WATER CONTENT VS MEAN EFFECTIVE DROP DIAMETER
1. Pressure altitude range, 4,000–22,000 ft.
2. Horizontal extent, standard distance of 2.6 Nautical Miles.
SOURCE OF DATA
NACA TN NO. 1855
CLASS II-M INTERMITTENT MAXIMUM
NOTE: DASHED LINES INDICATE POSSIBLE EXTENT OF LIMITS.
AIR TEMP. +32°F
-14°F
-40°F
-22°F
-40°F
LIQUID WATER CONTENT-GRAMS PER CUBIC METER
3.0
2.5
2.0
1.5
1.0
0.5
0
15
20
25
30
35
40
45
50
MEAN EFFECTIVE DROP DIAMETER - MICRONS

FIGURE 5

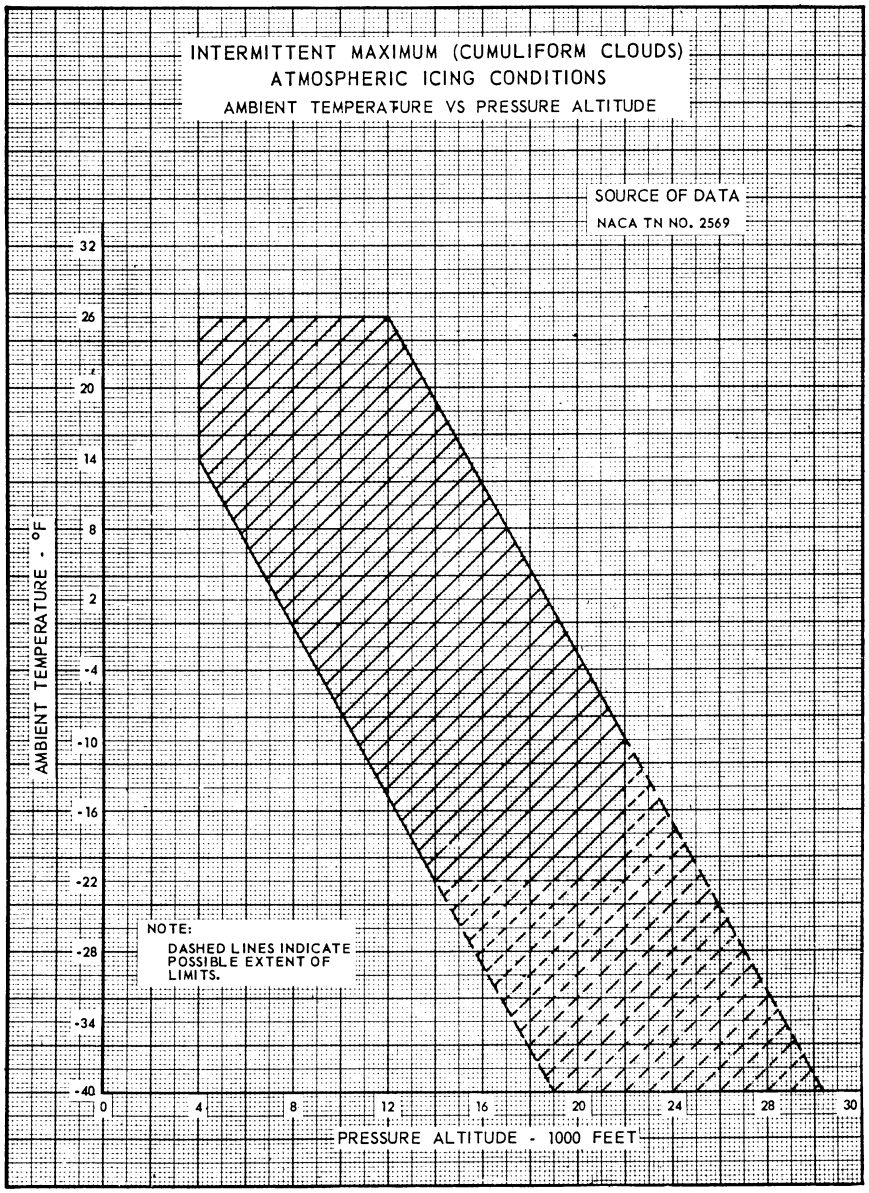
INTERMITTENT MAXIMUM (CUMULIFORM CLOUDS)
ATMOSPHERIC ICING CONDITIONS
AMBIENT TEMPERATURE VS PRESSURE ALTITUDE
SOURCE OF DATA
NACA TN NO. 2569
AMBIENT TEMPERATURE - °F
32
26
20
14
8
2
-4
-10
-16
-22
-28
-34
-40
NOTE:
DASHED LINES INDICATE POSSIBLE EXTENT OF LIMITS.
0
4
8
12
16
20
24
28
30
PRESSURE ALTITUDE - 1000 FEET

FIGURE 6

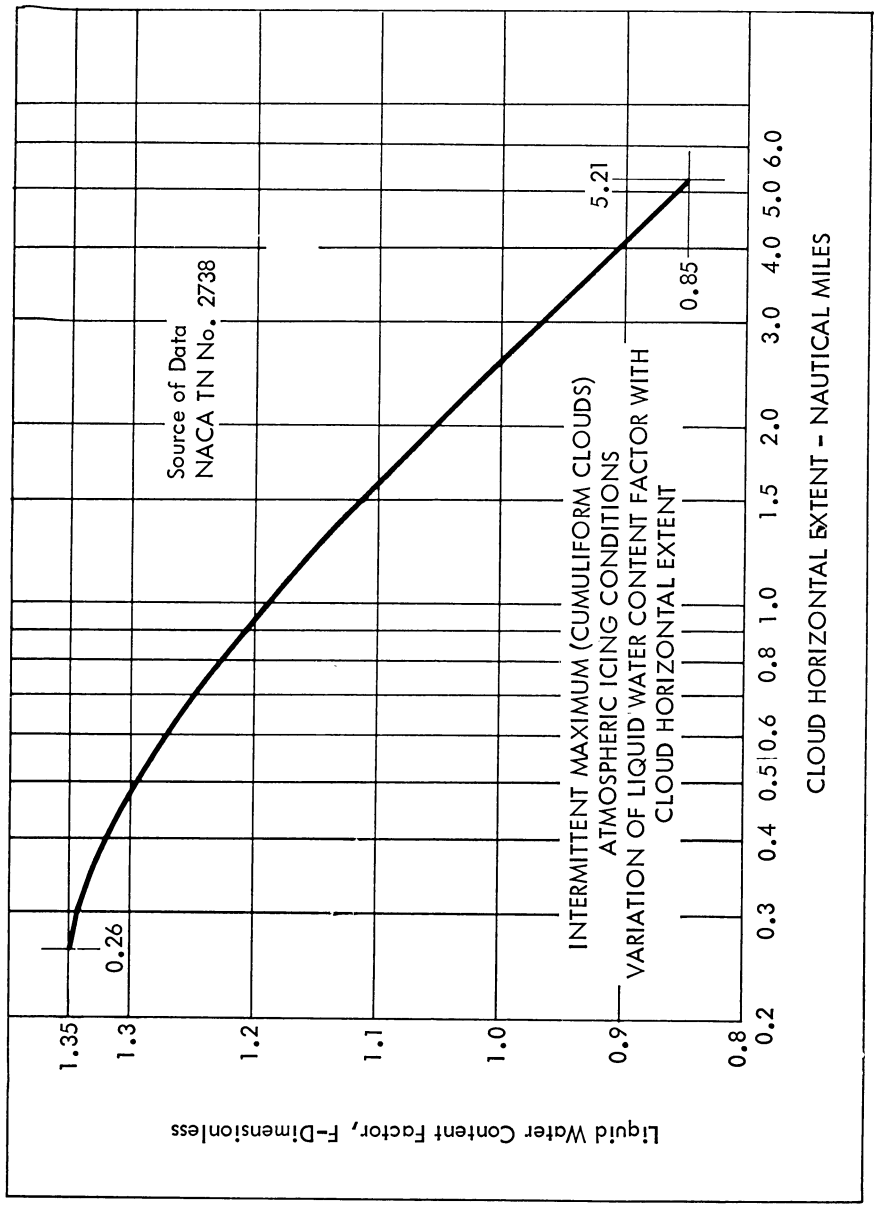

(c) *Takeoff maximum icing.* The maximum intensity of atmospheric icing conditions for takeoff (takeoff maximum icing) is defined by the cloud liquid water content of 0.35 g/m3, the mean effective diameter of the cloud droplets of 20 microns, and the ambient air temperature at ground level of minus 9 degrees Celsius (-9° C). The takeoff maximum icing conditions extend from ground level to a height of 1,500 feet above the level of the takeoff surface.

Part II—Airframe Ice Accretions for Showing Compliance With Subpart B.

(a) *Ice accretions—General.* The most critical ice accretion in terms of airplane performance and handling qualities for each flight phase must be used to show compliance with the applicable airplane performance and handling requirements in icing conditions of subpart B of this part. Applicants must demonstrate that the full range of atmospheric icing conditions specified in part I of this appendix have been considered, including the mean effective drop diameter, liquid water content, and temperature appropriate to the flight conditions (for example, configuration, speed, angle-of-attack, and altitude). The ice accretions for each flight phase are defined as follows:

(1) *Takeoff ice* is the most critical ice accretion on unprotected surfaces and any ice accretion on the protected surfaces appropriate to normal ice protection system operation, occurring between liftoff and 400 feet above the takeoff surface, assuming accretion starts at liftoff in the takeoff maximum icing conditions of part I, paragraph (c) of this appendix.

(2) *Final takeoff ice* is the most critical ice accretion on unprotected surfaces, and any ice accretion on the protected surfaces appropriate to normal ice protection system operation, between 400 feet and either 1,500 feet above the takeoff surface, or the height at which the transition from the takeoff to the en route configuration is completed and V_{FTO} is reached, whichever is higher. Ice accretion is assumed to start at liftoff in the takeoff maximum icing conditions of part I, paragraph (c) of this appendix.

(3) *En route ice* is the critical ice accretion on the unprotected surfaces, and any ice accretion on the protected surfaces appropriate to normal ice protection system operation, during the en route phase.

(4) *Holding ice* is the critical ice accretion on the unprotected surfaces, and any ice accretion on the protected surfaces appropriate to normal ice protection system operation, during the holding flight phase.

(5) *Approach ice* is the critical ice accretion on the unprotected surfaces, and any ice accretion on the protected surfaces appropriate to normal ice protection system operation following exit from the holding flight phase and transition to the most critical approach configuration.

(6) *Landing ice* is the critical ice accretion on the unprotected surfaces, and any ice accretion on the protected surfaces appropriate to normal ice protection system operation following exit from the approach flight phase and transition to the final landing configuration.

(b) In order to reduce the number of ice accretions to be considered when demonstrating compliance with the requirements of §25.21(g), any of the ice accretions defined in paragraph (a) of this section may be used for any other flight phase if it is shown to be more critical than the specific ice accretion defined for that flight phase. Configuration differences and their effects on ice accretions must be taken into account.

(c) The ice accretion that has the most adverse effect on handling qualities may be used for airplane performance tests provided any difference in performance is conservatively taken into account.

(d) For both unprotected and protected parts, the ice accretion for the takeoff phase may be determined by calculation, assuming the takeoff maximum icing conditions defined in appendix C, and assuming that:

(1) Airfoils, control surfaces and, if applicable, propellers are free from frost, snow, or ice at the start of the takeoff;

(2) The ice accretion starts at liftoff;

(3) The critical ratio of thrust/power-to-weight;

(4) Failure of the critical engine occurs at V_{EF}; and

(5) Crew activation of the ice protection system is in accordance with a normal operating procedure provided in the Airplane Flight Manual, except that after beginning the takeoff roll, it must be assumed that the crew takes no action to activate the ice protection system until the airplane is at least 400 feet above the takeoff surface.

(e) The ice accretion before the ice protection system has been activated and is performing its intended function is the critical ice accretion formed on the unprotected and normally protected surfaces before activation and effective operation of the ice protection system in continuous maximum atmospheric icing conditions. This ice accretion only applies in showing compliance to §§25.143(j) and 25.207(h).

[Doc. No. 4080, 29 FR 17955, Dec. 18, 1964, as amended by Amdt. 25–121, 72 FR 44669, Aug. 8, 2007; 72 FR 50467, Aug. 31, 2007]

APPENDIX D TO PART 25

Criteria for determining minimum flight crew. The following are considered by the Agency in determining the minimum flight crew under §25.1523:

(a) *Basic workload functions.* The following basic workload functions are considered:

(1) Flight path control.

(2) Collision avoidance.

(3) Navigation.

(4) Communications.

(5) Operation and monitoring of aircraft engines and systems.

(6) Command decisions.

(b) *Workload factors.* The following workload factors are considered significant when analyzing and demonstrating workload for minimum flight crew determination:

(1) The accessibility, ease, and simplicity of operation of all necessary flight, power, and equipment controls, including emergency fuel shutoff valves, electrical controls, electronic controls, pressurization system controls, and engine controls.

(2) The accessibility and conspicuity of all necessary instruments and failure warning devices such as fire warning, electrical system malfunction, and other failure or caution indicators. The extent to which such instruments or devices direct the proper corrective action is also considered.

(3) The number, urgency, and complexity of operating procedures with particular consideration given to the specific fuel management schedule imposed by center of gravity, structural or other considerations of an airworthiness nature, and to the ability of each engine to operate at all times from a single tank or source which is automatically replenished if fuel is also stored in other tanks.

(4) The degree and duration of concentrated mental and physical effort involved in normal operation and in diagnosing and coping with malfunctions and emergencies.

(5) The extent of required monitoring of the fuel, hydraulic, pressurization, electrical, electronic, deicing, and other systems while en route.

(6) The actions requiring a crewmember to be unavailable at his assigned duty station, including: observation of systems, emergency operation of any control, and emergencies in any compartment.

(7) The degree of automation provided in the aircraft systems to afford (after failures or malfunctions) automatic crossover or isolation of difficulties to minimize the need for flight crew action to guard against loss of hydraulic or electric power to flight controls or to other essential systems.

(8) The communications and navigation workload.

(9) The possibility of increased workload associated with any emergency that may lead to other emergencies.

(10) Incapacitation of a flight crewmember whenever the applicable operating rule requires a minimum flight crew of at least two pilots.

(c) *Kind of operation authorized*. The determination of the kind of operation authorized requires consideration of the operating rules under which the airplane will be operated. Unless an applicant desires approval for a more limited kind of operation. It is assumed that each airplane certificated under this Part will operate under IFR conditions.

[Amdt. 25–3, 30 FR 6067, Apr. 29, 1965]

APPENDIX E TO PART 25

I—Limited Weight Credit For Airplanes Equipped With Standby Power

(a) Each applicant for an increase in the maximum certificated takeoff and landing weights of an airplane equipped with a type-certificated standby power rocket engine may obtain an increase as specified in paragraph (b) if—

(1) The installation of the rocket engine has been approved and it has been established by flight test that the rocket engine and its controls can be operated safely and reliably at the increase in maximum weight; and

(2) The Airplane Flight Manual, or the placard, markings or manuals required in place thereof, set forth in addition to any other operating limitations the Administrator may require, the increased weight approved under this regulation and a prohibition against the operation of the airplane at the approved increased weight when—

(i) The installed standby power rocket engines have been stored or installed in excess of the time limit established by the manufacturer of the rocket engine (usually stenciled on the engine casing); or

(ii) The rocket engine fuel has been expended or discharged.

(b) The currently approved maximum takeoff and landing weights at which an airplane is certificated without a standby power rocket engine installation may be increased by an amount that does not exceed any of the following:

(1) An amount equal in pounds to 0.014 IN, where I is the maximum usable impulse in pounds-seconds available from each standby power rocket engine and N is the number of rocket engines installed.

(2) An amount equal to 5 percent of the maximum certificated weight approved in accordance with the applicable airworthiness regulations without standby power rocket engines installed.

(3) An amount equal to the weight of the rocket engine installation.

(4) An amount that, together with the currently approved maximum weight, would equal the maximum structural weight established for the airplane without standby rocket engines installed.

II—Performance Credit for Transport Category Airplanes Equipped With Standby Power

The Administrator may grant performance credit for the use of standby power on transport category airplanes. However, the performance credit applies only to the maximum certificated takeoff and landing weights, the takeoff distance, and the takeoff paths, and may not exceed that found by the Administrator to result in an overall level of safety in the takeoff, approach, and

landing regimes of flight equivalent to that prescribed in the regulations under which the airplane was originally certificated without standby power. For the purposes of this appendix, ''standby power'' is power or thrust, or both, obtained from rocket engines for a relatively short period and actuated only in cases of emergency. The following provisions apply:

(1) *Takeoff; general.* The takeoff data prescribed in paragraphs (2) and (3) of this appendix must be determined at all weights and altitudes, and at ambient temperatures if applicable, at which performance credit is to be applied.

(2) *Takeoff path.*

(a) The one-engine-inoperative takeoff path with standby power in use must be determined in accordance with the performance requirements of the applicable airworthiness regulations.

(b) The one-engine-inoperative takeoff path (excluding that part where the airplane is on or just above the takeoff surface) determined in accordance with paragraph (a) of this section must lie above the one-engine-inoperative takeoff path without standby power at the maximum takeoff weight at which all of the applicable air-worthiness requirements are met. For the purpose of this comparison, the flight path is considered to extend to at least a height of 400 feet above the takeoff surface.

(c) The takeoff path with all engines operating, but without the use of standby power, must reflect a conservatively greater overall level of performance than the one-engine-inoperative takeoff path established in accordance with paragraph (a) of this section. The margin must be established by the Administrator to insure safe day-to-day operations, but in no case may it be less than 15 percent. The all-engines-operating takeoff path must be determined by a procedure consistent with that established in complying with paragraph (a) of this section.

(d) For reciprocating-engine-powered airplanes, the takeoff path to be scheduled in the Airplane Flight Manual must represent the one-engine-operative takeoff path determined in accordance with paragraph (a) of this section and modified to reflect the procedure (see paragraph (6)) established by the applicant for flap retraction and attainment of the en route speed. The scheduled takeoff path must have a positive slope at all points of the airborne portion and at no point must it lie above the takeoff path specified in paragraph (a) of this section.

(3) *Takeoff distance.* The takeoff distance must be the horizontal distance along the one-engine-inoperative take off path determined in accordance with paragraph (2)(a) from the start of the takeoff to the point where the airplane attains a height of 50 feet above the takeoff surface for reciprocating-engine-powered airplanes and a height of 35 feet above the takeoff surface for turbine-powered airplanes.

(4) *Maximum certificated takeoff weights.* The maximum certificated takeoff weights must be determined at all altitudes, and at ambient temperatures, if applicable, at which performance credit is to be applied and may not exceed the weights established in compliance with paragraphs (a) and (b) of this section.

(a) The conditions of paragraphs (2)(b) through (d) must be met at the maximum certificated takeoff weight.

(b) Without the use of standby power, the airplane must meet all of the en route requirements of the applicable airworthiness regulations under which the airplane was originally certificated. In addition, turbine-powered airplanes without the use of standby power must meet the final takeoff climb requirements prescribed in the applicable airworthiness regulations.

(5) *Maximum certificated landing weights.*

(a) The maximum certificated landing weights (one-engine-inoperative approach and all-engine-operating landing climb) must be determined at all altitudes, and at ambient temperatures if applicable, at which performance credit is to be applied and must not exceed that established in compliance with paragraph (b) of this section.

(b) The flight path, with the engines operating at the power or thrust, or both, appropriate to the airplane configuration and with standby power in use, must lie above the flight path without standby power in use at the maximum weight at which all of the applicable airworthiness requirements are met. In addition, the flight paths must comply with subparagraphs (i) and (ii) of this paragraph.

(i) The flight paths must be established without changing the appropriate airplane configuration.

(ii) The flight paths must be carried out for a minimum height of 400 feet above the point where standby power is actuated.

(6) *Airplane configuration, speed, and power and thrust; general.* Any change in the airplane's configuration, speed, and power or thrust, or both, must be made in accordance with the procedures established by the applicant for the operation of the airplane in service and must comply with paragraphs (a) through (c) of this section. In addition, procedures must be established for the execution of balked landings and missed approaches.

(a) The Administrator must find that the procedure can be consistently executed in service by crews of average skill.

(b) The procedure may not involve methods or the use of devices which have not been proven to be safe and reliable.

(c) Allowances must be made for such time delays in the execution of the procedures as may be reasonably expected to occur during service.

(7) *Installation and operation; standby power.* The standby power unit and its installation must comply with paragraphs (a) and (b) of this section.

(a) The standby power unit and its installation must not adversely affect the safety of the airplane.

(b) The operation of the standby power unit and its control must have proven to be safe and reliable.

[Amdt. 25–6, 30 FR 8468, July 2, 1965]

APPENDIX F TO PART 25

Part I—Test Criteria and Procedures for Showing Compliance with § 25.853, or § 25.855.

(a) *Material test criteria*—(1) *Interior compartments occupied by crew or passengers.* (i) Interior ceiling panels, interior wall panels, partitions, galley structure, large cabinet walls, structural flooring, and materials used in the construction of stowage compartments (other than underseat stowage compartments and compartments for stowing small items such as magazines and maps) must be self-extinguishing when tested vertically in accordance with the applicable portions of part I of this appendix. The average burn length may not exceed 6 inches and the average flame time after removal of the flame source may not exceed 15 seconds. Drippings from the test specimen may not continue to flame for more than an average of 3 seconds after falling.

(ii) Floor covering, textiles (including draperies and upholstery), seat cushions, padding, decorative and nondecorative coated fabrics, leather, trays and galley furnishings, electrical conduit, air ducting, joint and edge covering, liners of Class B and E cargo or baggage compartments, floor panels of Class B, C, D, or E cargo or baggage compartments, cargo covers and transparencies, molded and thermoformed parts, air ducting joints, and trim strips (decorative and chafing), that are constructed of materials not covered in subparagraph (iv) below, must be self-extinguishing when tested vertically in accordance with the applicable portions of part I of this appendix or other approved equivalent means. The average burn length may not exceed 8 inches, and the average flame time after removal of the flame source may not exceed 15 seconds. Drippings from the test specimen may not continue to flame for more than an average of 5 seconds after falling.

(iii) Motion picture film must be safety film meeting the Standard Specifications for Safety Photographic Film PHI.25 (available from the American National Standards Institute, 1430 Broadway, New York, NY 10018). If the film travels through ducts, the ducts must meet the requirements of subparagraph (ii) of this paragraph.

(iv) Clear plastic windows and signs, parts constructed in whole or in part of elastomeric materials, edge lighted instrument assemblies consisting of two or more instruments in a common housing, seat belts, shoulder harnesses, and cargo and baggage tiedown equipment, including containers, bins, pallets, etc., used in passenger or crew compartments, may not have an average burn rate greater than 2.5 inches per minute when tested horizontally in accordance with the applicable portions of this appendix.

(v) Except for small parts (such as knobs, handles, rollers, fasteners, clips, grommets, rub strips, pulleys, and small electrical parts) that would not contribute significantly to the propagation of a fire and for electrical wire and cable insulation, materials in items not specified in paragraphs (a)(1)(i), (ii), (iii), or (iv) of part I of this appendix may not have a burn rate greater than 4.0 inches per minute when tested horizontally in accordance with the applicable portions of this appendix.

(2) *Cargo and baggage compartments not occupied by crew or passengers.*

(i) [Reserved]

(ii) A cargo or baggage compartment defined in § 25.857 as Class B or E must have a liner constructed of materials that meet the requirements of paragraph (a)(1)(ii) of part I of this appendix and separated from the airplane structure (except for attachments). In addition, such liners must be subjected to the 45 degree angle test. The flame may not penetrate (pass through) the material during application of the flame or subsequent to its removal. The average flame time after removal of the flame source may not exceed 15 seconds, and the average glow time may not exceed 10 seconds.

(iii) A cargo or baggage compartment defined in § 25.857 as Class B, C, D, or E must have floor panels constructed of materials which meet the requirements of paragraph (a)(1)(ii) of part I of this appendix and which are separated from the airplane structure (except for attachments). Such panels must be subjected to the 45 degree angle test. The flame may not penetrate (pass through) the material during application of the flame or subsequent to its removal. The average flame time after removal of the flame source may not exceed 15 seconds, and the average glow time may not exceed 10 seconds.

(iv) Insulation blankets and covers used to protect cargo must be constructed of materials that meet the requirements of paragraph (a)(1)(ii) of part I of this appendix. Tiedown equipment (including containers, bins, and pallets) used in each cargo and baggage compartment must be constructed of materials that meet the requirements of paragraph (a)(1)(v) of part I of this appendix.

(3) *Electrical system components.* Insulation on electrical wire or cable installed in any

area of the fuselage must be self-extinguishing when subjected to the 60 degree test specified in part I of this appendix. The average burn length may not exceed 3 inches, and the average flame time after removal of the flame source may not exceed 30 seconds. Drippings from the test specimen may not continue to flame for more than an average of 3 seconds after falling.

(b) *Test Procedures*—(1) *Conditioning*. Specimens must be conditioned to 70 ±5 F., and at 50 percent ±5 percent relative humidity until moisture equilibrium is reached or for 24 hours. Each specimen must remain in the conditioning environment until it is subjected to the flame.

(2) *Specimen configuration*. Except for small parts and electrical wire and cable insulation, materials must be tested either as section cut from a fabricated part as installed in the airplane or as a specimen simulating a cut section, such as a specimen cut from a flat sheet of the material or a model of the fabricated part. The specimen may be cut from any location in a fabricated part; however, fabricated units, such as sandwich panels, may not be separated for test. Except as noted below, the specimen thickness must be no thicker than the minimum thickness to be qualified for use in the airplane. Test specimens of thick foam parts, such as seat cushions, must be ½-inch in thickness. Test specimens of materials that must meet the requirements of paragraph (a)(1)(v) of part I of this appendix must be no more than ⅛-inch in thickness. Electrical wire and cable specimens must be the same size as used in the airplane. In the case of fabrics, both the warp and fill direction of the weave must be tested to determine the most critical flammability condition. Specimens must be mounted in a metal frame so that the two long edges and the upper edge are held securely during the vertical test prescribed in subparagraph (4) of this paragraph and the two long edges and the edge away from the flame are held securely during the horizontal test prescribed in subparagraph (5) of this paragraph. The exposed area of the specimen must be at least 2 inches wide and 12 inches long, unless the actual size used in the airplane is smaller. The edge to which the burner flame is applied must not consist of the finished or protected edge of the specimen but must be representative of the actual cross-section of the material or part as installed in the airplane. The specimen must be mounted in a metal frame so that all four edges are held securely and the exposed area of the specimen is at least 8 inches by 8 inches during the 45° test prescribed in subparagraph (6) of this paragraph.

(3) *Apparatus*. Except as provided in subparagraph (7) of this paragraph, tests must be conducted in a draft-free cabinet in accordance with Federal Test Method Standard 191 Model 5903 (revised Method 5902) for the vertical test, or Method 5906 for horizontal test (available from the General Services Administration, Business Service Center, Region 3, Seventh & D Streets SW., Washington, DC 20407). Specimens which are too large for the cabinet must be tested in similar draft-free conditions.

(4) *Vertical test*. A minimum of three specimens must be tested and results averaged. For fabrics, the direction of weave corresponding to the most critical flammability conditions must be parallel to the longest dimension. Each specimen must be supported vertically. The specimen must be exposed to a Bunsen or Tirrill burner with a nominal ⅜-inch I.D. tube adjusted to give a flame of 1½ inches in height. The minimum flame temperature measured by a calibrated thermocouple pyrometer in the center of the flame must be 1550 °F. The lower edge of the specimen must be ¾-inch above the top edge of the burner. The flame must be applied to the center line of the lower edge of the specimen. For materials covered by paragraph (a)(1)(i) of part I of this appendix, the flame must be applied for 60 seconds and then removed. For materials covered by paragraph (a)(1)(ii) of part I of this appendix, the flame must be applied for 12 seconds and then removed. Flame time, burn length, and flaming time of drippings, if any, may be recorded. The burn length determined in accordance with subparagraph (7) of this paragraph must be measured to the nearest tenth of an inch.

(5) *Horizontal test*. A minimum of three specimens must be tested and the results averaged. Each specimen must be supported horizontally. The exposed surface, when installed in the aircraft, must be face down for the test. The specimen must be exposed to a Bunsen or Tirrill burner with a nominal ⅜-inch I.D. tube adjusted to give a flame of 1½ inches in height. The minimum flame temperature measured by a calibrated thermocouple pyrometer in the center of the flame must be 1550 °F. The specimen must be positioned so that the edge being tested is centered ¾-inch above the top of the burner. The flame must be applied for 15 seconds and then removed. A minimum of 10 inches of specimen must be used for timing purposes, approximately 1½ inches must burn before the burning front reaches the timing zone, and the average burn rate must be recorded.

(6) *Forty-five degree test*. A minimum of three specimens must be tested and the results averaged. The specimens must be supported at an angle of 45° to a horizontal surface. The exposed surface when installed in the aircraft must be face down for the test. The specimens must be exposed to a Bunsen or Tirrill burner with a nominal ⅜-inch I.D. tube adjusted to give a flame of 1½ inches in height. The minimum flame temperature measured by a calibrated thermocouple pyrometer in the center of the flame must be 1550 °F. Suitable precautions must be taken

to avoid drafts. The flame must be applied for 30 seconds with one-third contacting the material at the center of the specimen and then removed. Flame time, glow time, and whether the flame penetrates (passes through) the specimen must be recorded.

(7) *Sixty degree test.* A minimum of three specimens of each wire specification (make and size) must be tested. The specimen of wire or cable (including insulation) must be placed at an angle of 60° with the horizontal in the cabinet specified in subparagraph (3) of this paragraph with the cabinet door open during the test, or must be placed within a chamber approximately 2 feet high by 1 foot by 1 foot, open at the top and at one vertical side (front), and which allows sufficient flow of air for complete combustion, but which is free from drafts. The specimen must be parallel to and approximately 6 inches from the front of the chamber. The lower end of the specimen must be held rigidly clamped. The upper end of the specimen must pass over a pulley or rod and must have an appropriate weight attached to it so that the specimen is held tautly throughout the flammability test. The test specimen span between lower clamp and upper pulley or rod must be 24 inches and must be marked 8 inches from the lower end to indicate the central point for flame application. A flame from a Bunsen or Tirrill burner must be applied for 30 seconds at the test mark. The burner must be mounted underneath the test mark on the specimen, perpendicular to the specimen and at an angle of 30° to the vertical plane of the specimen. The burner must have a nominal bore of ⅜-inch and be adjusted to provide a 3-inch high flame with an inner cone approximately one-third of the flame height. The minimum temperature of the hottest portion of the flame, as measured with a calibrated thermocouple pyrometer, may not be less than 1750 °F. The burner must be positioned so that the hottest portion of the flame is applied to the test mark on the wire. Flame time, burn length, and flaming time of drippings, if any, must be recorded. The burn length determined in accordance with paragraph (8) of this paragraph must be measured to the nearest tenth of an inch. Breaking of the wire specimens is not considered a failure.

(8) *Burn length.* Burn length is the distance from the original edge to the farthest evidence of damage to the test specimen due to flame impingement, including areas of partial or complete consumption, charring, or embrittlement, but not including areas sooted, stained, warped, or discolored, nor areas where material has shrunk or melted away from the heat source.

Part II—Flammability of Seat Cushions

(a) *Criteria for Acceptance.* Each seat cushion must meet the following criteria:

(1) At least three sets of seat bottom and seat back cushion specimens must be tested.

(2) If the cushion is constructed with a fire blocking material, the fire blocking material must completely enclose the cushion foam core material.

(3) Each specimen tested must be fabricated using the principal components (i.e., foam core, flotation material, fire blocking material, if used, and dress covering) and assembly processes (representative seams and closures) intended for use in the production articles. If a different material combination is used for the back cushion than for the bottom cushion, both material combinations must be tested as complete specimen sets, each set consisting of a back cushion specimen and a bottom cushion specimen. If a cushion, including outer dress covering, is demonstrated to meet the requirements of this appendix using the oil burner test, the dress covering of that cushion may be replaced with a similar dress covering provided the burn length of the replacement covering, as determined by the test specified in §25.853(c), does not exceed the corresponding burn length of the dress covering used on the cushion subjected to the oil burner test.

(4) For at least two-thirds of the total number of specimen sets tested, the burn length from the burner must not reach the side of the cushion opposite the burner. The burn length must not exceed 17 inches. Burn length is the perpendicular distance from the inside edge of the seat frame closest to the burner to the farthest evidence of damage to the test specimen due to flame impingement, including areas of partial or complete consumption, charring, or embrittlement, but not including areas sooted, stained, warped, or discolored, or areas where material has shrunk or melted away from the heat source.

(5) The average percentage weight loss must not exceed 10 percent. Also, at least two-thirds of the total number of specimen sets tested must not exceed 10 percent weight loss. All droppings falling from the cushions and mounting stand are to be discarded before the after-test weight is determined. The percentage weight loss for a specimen set is the weight of the specimen set before testing less the weight of the specimen set after testing expressed as the percentage of the weight before testing.

(b) *Test Conditions.* Vertical air velocity should average 25 fpm±10 fpm at the top of the back seat cushion. Horizontal air velocity should be below 10 fpm just above the bottom seat cushion. Air velocities should be measured with the ventilation hood operating and the burner motor off.

(c) *Test Specimens.* (1) For each test, one set of cushion specimens representing a seat bottom and seat back cushion must be used.

(2) The seat bottom cushion specimen must be 18 ±⅛ inches (457 ±3 mm) wide by 20 ±⅛ inches (508 ±3 mm) deep by 4 ±⅛ inches (102

±3 mm) thick, exclusive of fabric closures and seam overlap.

(3) The seat back cushion specimen must be 18 ±⅛ inches (432 ±3 mm) wide by 25 ±⅛ inches (635 ±3 mm) high by 2 ±⅛ inches (51 ±3 mm) thick, exclusive of fabric closures and seam overlap.

(4) The specimens must be conditioned at 70 ±5 °F (21 ±2 °C) 55%±10% relative humidity for at least 24 hours before testing.

(d) *Test Apparatus*. The arrangement of the test apparatus is shown in Figures 1 through 5 and must include the components described in this section. Minor details of the apparatus may vary, depending on the model burner used.

(1) *Specimen Mounting Stand*. The mounting stand for the test specimens consists of steel angles, as shown in Figure 1. The length of the mounting stand legs is 12 ±⅛ inches (305 ±3 mm). The mounting stand must be used for mounting the test specimen seat bottom and seat back, as shown in Figure 2. The mounting stand should also include a suitable drip pan lined with aluminum foil, dull side up.

(2) *Test Burner*. The burner to be used in testing must—

(i) Be a modified gun type;

(ii) Have an 80-degree spray angle nozzle nominally rated for 2.25 gallons/hour at 100 psi;

(iii) Have a 12-inch (305 mm) burner cone installed at the end of the draft tube, with an opening 6 inches (152 mm) high and 11 inches (280 mm) wide, as shown in Figure 3; and

(iv) Have a burner fuel pressure regulator that is adjusted to deliver a nominal 2.0 gallon/hour of # 2 Grade kerosene or equivalent required for the test.

Burner models which have been used successfully in testing are the Lennox Model OB–32, Carlin Model 200 CRD, and Park Model DPL 3400. FAA published reports pertinent to this type of burner are: (1) Powerplant Enginering Report No. 3A, Standard Fire Test Apparatus and Procedure for Flexible Hose Assemblies, dated March 1978; and (2) Report No. DOT/FAA/RD/76/213, Reevaluation of Burner Characteristics for Fire Resistance Tests, dated January 1977.

(3) *Calorimeter*.

(i) The calorimeter to be used in testing must be a (0–15.0 BTU/ft^2-sec. 0–17.0 W/cm^2) calorimeter, accurate ±3%, mounted in a 6-inch by 12-inch (152 by 305 mm) by ¾-inch (19 mm) thick calcium silicate insulating board which is attached to a steel angle bracket for placement in the test stand during burner calibration, as shown in Figure 4.

(ii) Because crumbling of the insulating board with service can result in misalignment of the calorimeter, the calorimeter must be monitored and the mounting shimmed, as necessary, to ensure that the calorimeter face is flush with the exposed plane of the insulating board in a plane parallel to the exit of the test burner cone.

(4) *Thermocouples*. The seven thermocouples to be used for testing must be 1/16- to ⅛-inch metal sheathed, ceramic packed, type K, grounded thermocouples with a nominal 22 to 30 American wire gage (AWG)-size conductor. The seven thermocouples must be attached to a steel angle bracket to form a thermocouple rake for placement in the test stand during burner calibration, as shown in Figure 5.

(5) *Apparatus Arrangement*. The test burner must be mounted on a suitable stand to position the exit of the burner cone a distance of 4 ±⅛ inches (102 ±3 mm) from one side of the specimen mounting stand. The burner stand should have the capability of allowing the burner to be swung away from the specimen mounting stand during warmup periods.

(6) *Data Recording*. A recording potentiometer or other suitable calibrated instrument with an appropriate range must be used to measure and record the outputs of the calorimeter and the thermocouples.

(7) *Weight Scale*. Weighing Device—A device must be used that with proper procedures may determine the before and after test weights of each set of seat cushion specimens within 0.02 pound (9 grams). A continuous weighing system is preferred.

(8) *Timing Device*. A stopwatch or other device (calibrated to ±1 second) must be used to measure the time of application of the burner flame and self-extinguishing time or test duration.

(e) *Preparation of Apparatus*. Before calibration, all equipment must be turned on and the burner fuel must be adjusted as specified in paragraph (d)(2).

(f) *Calibration*. To ensure the proper thermal output of the burner, the following test must be made:

(1) Place the calorimeter on the test stand as shown in Figure 4 at a distance of 4 ±⅛ inches (102 ±3 mm) from the exit of the burner cone.

(2) Turn on the burner, allow it to run for 2 minutes for warmup, and adjust the burner air intake damper to produce a reading of 10.5 ±0.5 BTU/ft^2-sec. (11.9 ±0.6 w/cm^2) on the calorimeter to ensure steady state conditions have been achieved. Turn off the burner.

(3) Replace the calorimeter with the thermocouple rake (Figure 5).

(4) Turn on the burner and ensure that the thermocouples are reading 1900 ±100 °F (1038 ±38 °C) to ensure steady state conditions have been achieved.

(5) If the calorimeter and thermocouples do not read within range, repeat steps in paragraphs 1 through 4 and adjust the burner air intake damper until the proper readings are obtained. The thermocouple rake and the calorimeter should be used frequently to

maintain and record calibrated test parameters. Until the specific apparatus has demonstrated consistency, each test should be calibrated. After consistency has been confirmed, several tests may be conducted with the pre-test calibration before and a calibration check after the series.

(g) *Test Procedure*. The flammability of each set of specimens must be tested as follows:

(1) Record the weight of each set of seat bottom and seat back cushion specimens to be tested to the nearest 0.02 pound (9 grams).

(2) Mount the seat bottom and seat back cushion test specimens on the test stand as shown in Figure 2, securing the seat back cushion specimen to the test stand at the top.

(3) Swing the burner into position and ensure that the distance from the exit of the burner cone to the side of the seat bottom cushion specimen is 4 ±⅛ inches (102 ±3 mm).

(4) Swing the burner away from the test position. Turn on the burner and allow it to run for 2 minutes to provide adequate warmup of the burner cone and flame stabilization.

(5) To begin the test, swing the burner into the test position and simultaneously start the timing device.

(6) Expose the seat bottom cushion specimen to the burner flame for 2 minutes and then turn off the burner. Immediately swing the burner away from the test position. Terminate test 7 minutes after initiating cushion exposure to the flame by use of a gaseous extinguishing agent (i.e., Halon or CO_2).

(7) Determine the weight of the remains of the seat cushion specimen set left on the mounting stand to the nearest 0.02 pound (9 grams) excluding all droppings.

(h) *Test Report*. With respect to all specimen sets tested for a particular seat cushion for which testing of compliance is performed, the following information must be recorded:

(1) An identification and description of the specimens being tested.

(2) The number of specimen sets tested.

(3) The initial weight and residual weight of each set, the calculated percentage weight loss of each set, and the calculated average percentage weight loss for the total number of sets tested.

(4) The burn length for each set tested.

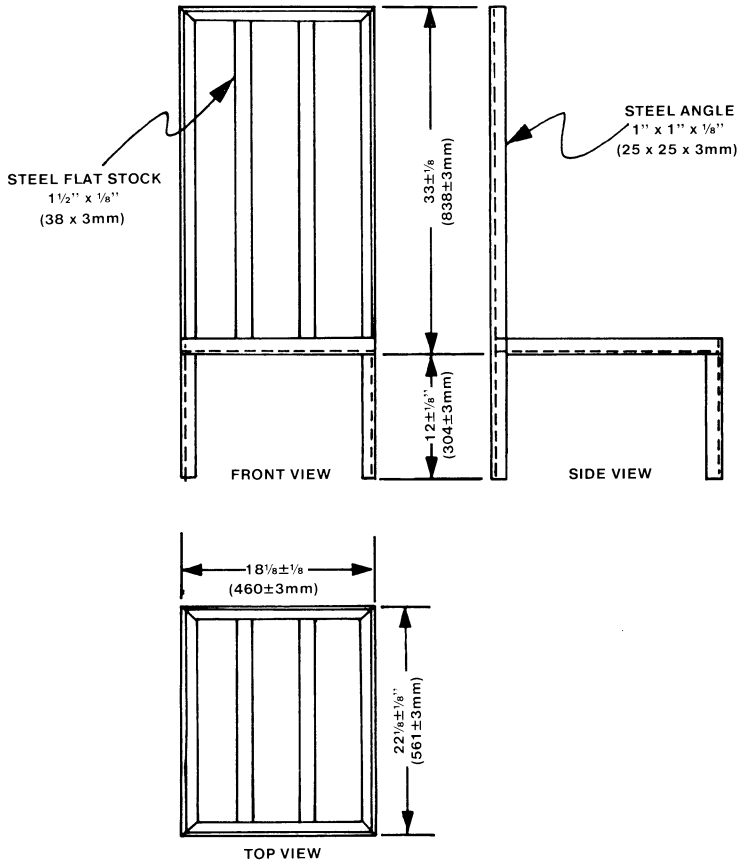

NOTE:
ALL JOINTS WELDED
FLAT STOCK BUTT WELDED
ALL MEASUREMENTS INSIDE

FIGURE 1

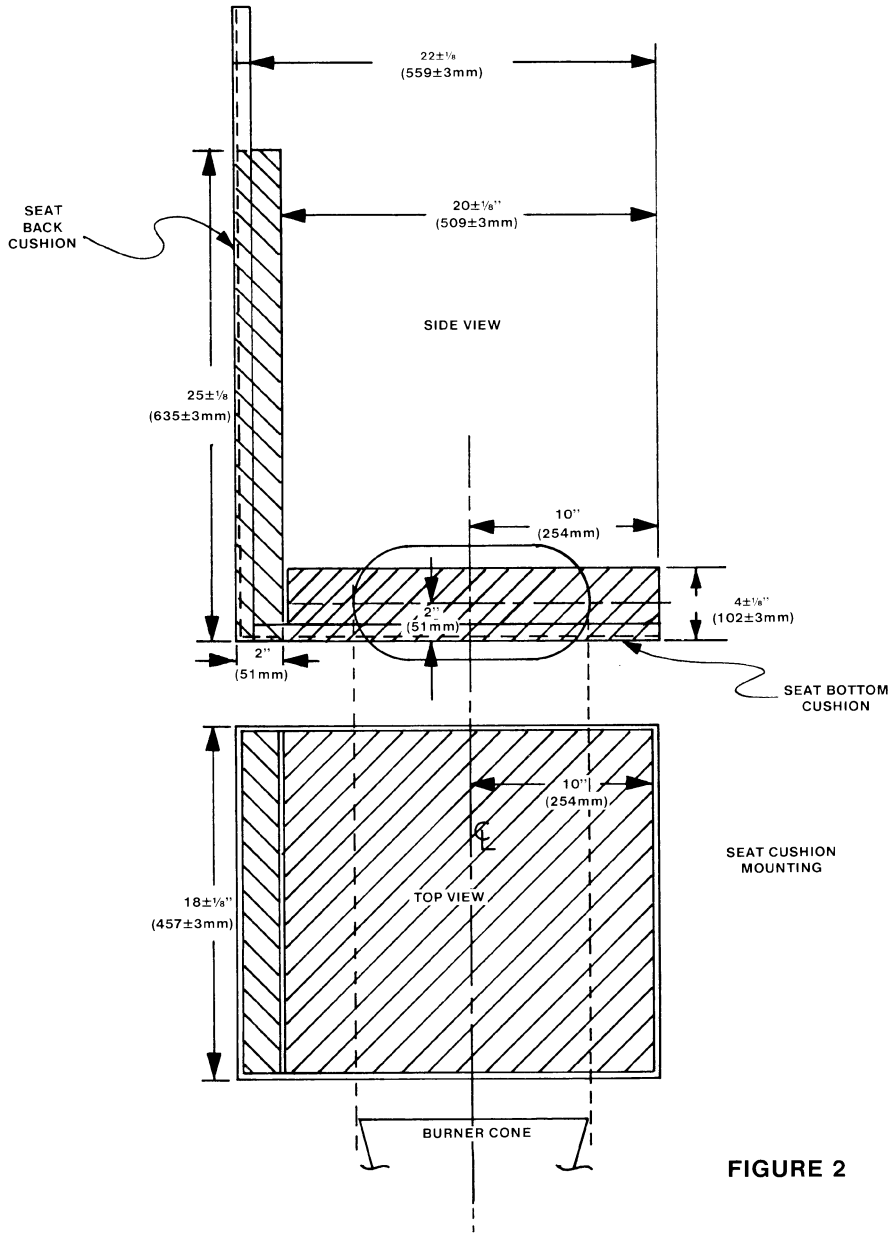
22±1/8
(559±3mm)
SEAT
BACK
CUSHION
20±1/8"
(509±3mm)
SIDE VIEW
25±1/8
(635±3mm)
10"
(254mm)
2"
(51mm)
4±1/8"
(102±3mm)
2"
(51mm)
SEAT BOTTOM
CUSHION
10"
(254mm)
SEAT CUSHION
MOUNTING
TOP VIEW
18±1/8"
(457±3mm)
BURNER CONE

FIGURE 2

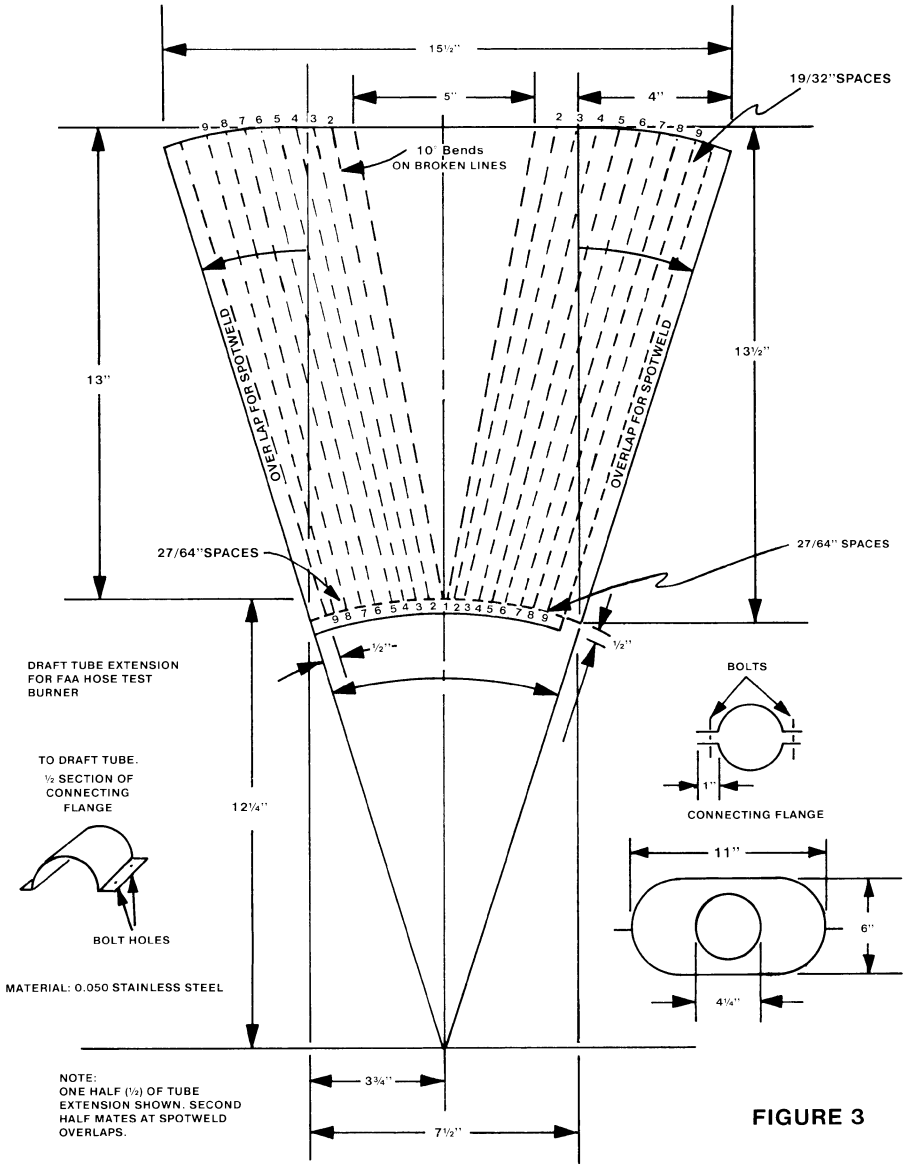
15½"
5"
4"
19/32"SPACES
10° Bends
ON BROKEN LINES
13"
13½"
OVER LAP FOR SPOTWELD
OVERLAP FOR SPOTWELD
27/64"SPACES
27/64" SPACES
½"
½"
DRAFT TUBE EXTENSION
FOR FAA HOSE TEST
BURNER
TO DRAFT TUBE.
½ SECTION OF
CONNECTING
FLANGE
BOLT HOLES
MATERIAL: 0.050 STAINLESS STEEL
12¼"
BOLTS
1"
CONNECTING FLANGE
11"
6"
4¼"
3¾"
7½"
NOTE:
ONE HALF (½) OF TUBE
EXTENSION SHOWN. SECOND
HALF MATES AT SPOTWELD
OVERLAPS.

FIGURE 3

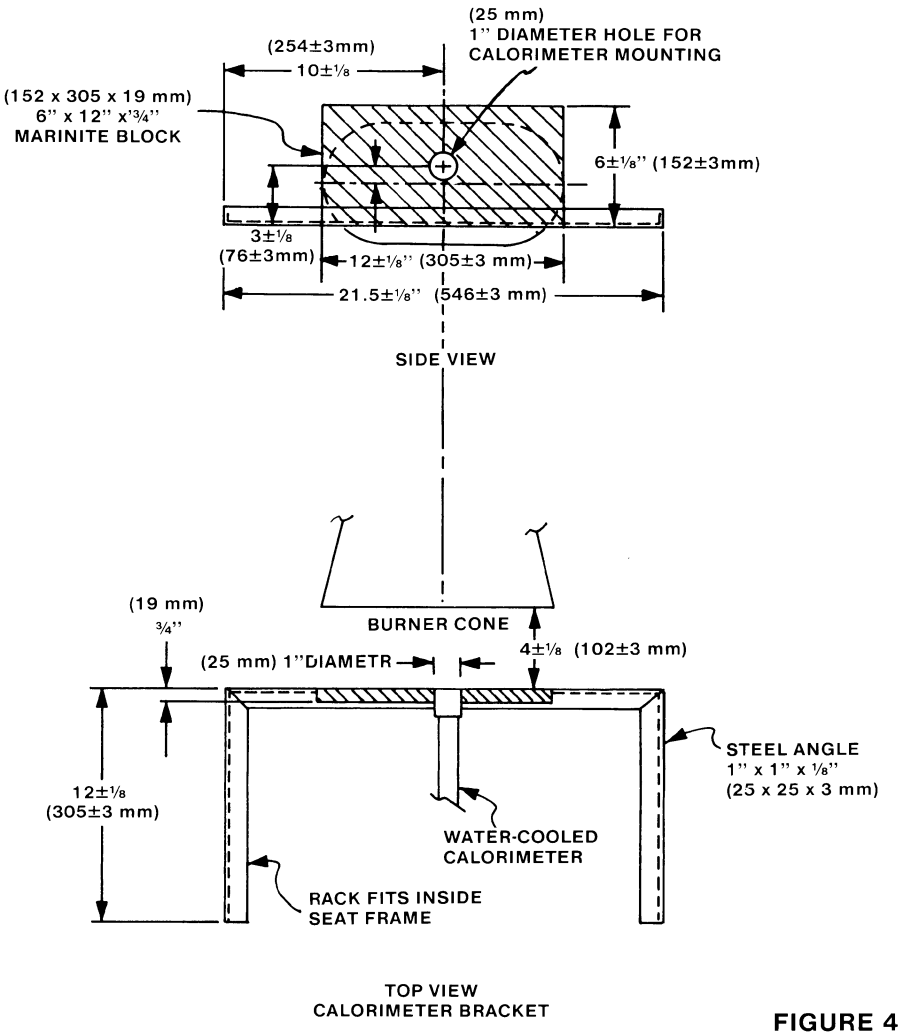
(25 mm)
1" DIAMETER HOLE FOR
CALORIMETER MOUNTING
(254±3mm)
10±1/8
(152 x 305 x 19 mm)
6" x 12" x 3/4"
MARINITE BLOCK
6±1/8" (152±3mm)
3±1/8
(76±3mm)
12±1/8" (305±3 mm)
21.5±1/8" (546±3 mm)
SIDE VIEW
BURNER CONE
(19 mm)
3/4"
(25 mm) 1"DIAMETR
4±1/8 (102±3 mm)
STEEL ANGLE
1" x 1" x 1/8"
(25 x 25 x 3 mm)
12±1/8
(305±3 mm)
WATER-COOLED
CALORIMETER
RACK FITS INSIDE
SEAT FRAME
TOP VIEW
CALORIMETER BRACKET

FIGURE 4

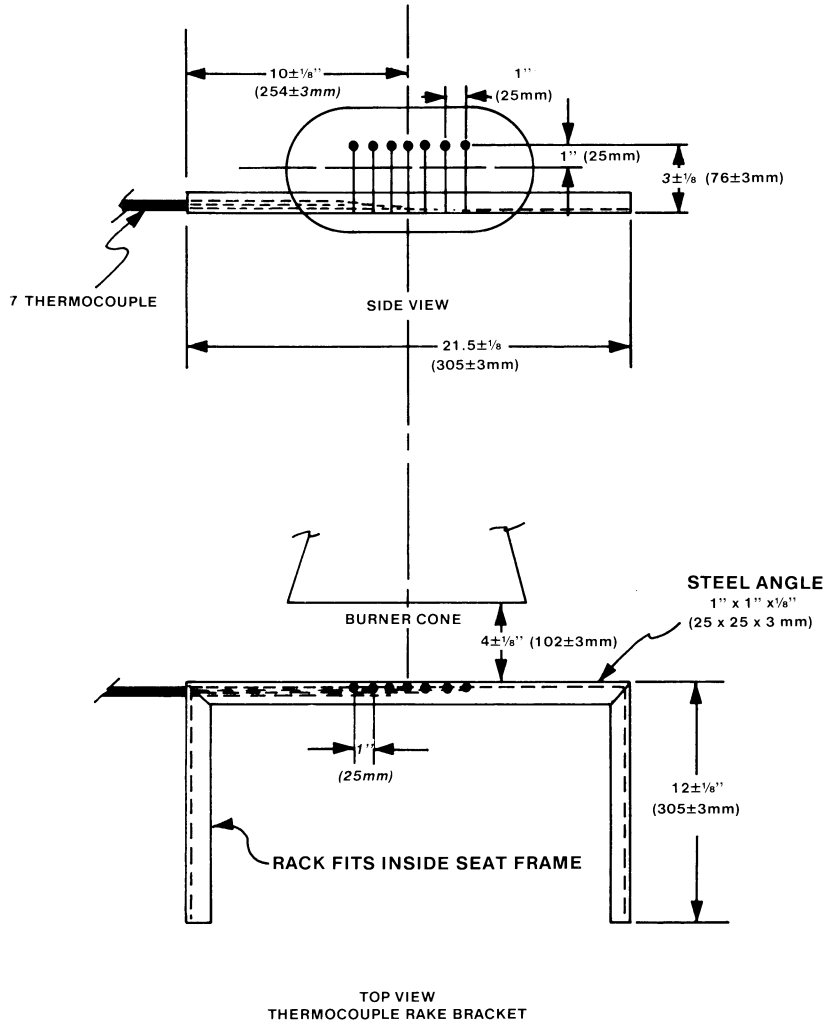

FIGURE 5

Part III—Test Method To Determine Flame Penetration Resistance of Cargo Compartment Liners.

(a) *Criteria for Acceptance.* (1) At least three specimens of cargo compartment sidewall or ceiling liner panels must be tested.

(2) Each specimen tested must simulate the cargo compartment sidewall or ceiling liner panel, including any design features, such as joints, lamp assemblies, etc., the failure of which would affect the capability of the liner to safely contain a fire.

(3) There must be no flame penetration of any specimen within 5 minutes after application of the flame source, and the peak temperature measured at 4 inches above the upper surface of the horizontal test sample must not exceed 400 °F.

(b) *Summary of Method*. This method provides a laboratory test procedure for measuring the capability of cargo compartment lining materials to resist flame penetration with a 2 gallon per hour (GPH) #2 Grade kerosene or equivalent burner fire source. Ceiling and sidewall liner panels may be tested individually provided a baffle is used to simulate the missing panel. Any specimen that passes the test as a ceiling liner panel may be used as a sidewall liner panel.

(c) *Test Specimens*. (1) The specimen to be tested must measure 16 ±⅛ inches (406 ±3 mm) by 24+⅛ inches (610 ±3 mm).

(2) The specimens must be conditioned at 70 °F.±5 °F. (21 °C. ±2 °C.) and 55%±5% humidity for at least 24 hours before testing.

(d) *Test Apparatus*. The arrangement of the test apparatus, which is shown in Figure 3 of Part II and Figures 1 through 3 of this part of appendix F, must include the components described in this section. Minor details of the apparatus may vary, depending on the model of the burner used.

(1) *Specimen Mounting Stand*. The mounting stand for the test specimens consists of steel angles as shown in Figure 1.

(2) *Test Burner*. The burner to be used in tesing must—

(i) Be a modified gun type.

(ii) Use a suitable nozzle and maintain fuel pressure to yield a 2 GPH fuel flow. For example: an 80 degree nozzle nominally rated at 2.25 GPH and operated at 85 pounds per square inch (PSI) gage to deliver 2.03 GPH.

(iii) Have a 12 inch (305 mm) burner extension installed at the end of the draft tube with an opening 6 inches (152 mm) high and 11 inches (280 mm) wide as shown in Figure 3 of Part II of this appendix.

(iv) Have a burner fuel pressure regulator that is adjusted to deliver a nominal 2.0 GPH of #2 Grade kerosene or equivalent.

Burner models which have been used successfully in testing are the Lenox Model OB–32, Carlin Model 200 CRD and Park Model DPL. The basic burner is described in FAA Powerplant Engineering Report No. 3A, Standard Fire Test Apparatus and Procedure for Flexible Hose Assemblies, dated March 1978; however, the test settings specified in this appendix differ in some instances from those specified in the report.

(3) *Calorimeter*. (i) The calorimeter to be used in testing must be a total heat flux Foil Type Gardon Gage of an appropriate range (approximately 0 to 15.0 British thermal unit (BTU) per ft.^{2} sec., 0–17.0 watts/cm^2). The calorimeter must be mounted in a 6 inch by 12 inch (152 by 305 mm) by ¾ inch (19 mm) thick insulating block which is attached to a steel angle bracket for placement in the test stand during burner calibration as shown in Figure 2 of this part of this appendix.

(ii) The insulating block must be monitored for deterioration and the mounting shimmed as necessary to ensure that the calorimeter face is parallel to the exit plane of the test burner cone.

(4) *Thermocouples*. The seven thermocouples to be used for testing must be 1/16 inch ceramic sheathed, type K, grounded thermocouples with a nominal 30 American wire gage (AWG) size conductor. The seven thermocouples must be attached to a steel angle bracket to form a thermocouple rake for placement in the test stand during burner calibration as shown in Figure 3 of this part of this appendix.

(5) *Apparatus Arrangement*. The test burner must be mounted on a suitable stand to position the exit of the burner cone a distance of 8 inches from the ceiling liner panel and 2 inches from the sidewall liner panel. The burner stand should have the capability of allowing the burner to be swung away from the test specimen during warm-up periods.

(6) *Instrumentation*. A recording potentiometer or other suitable instrument with an appropriate range must be used to measure and record the outputs of the calorimeter and the thermocouples.

(7) *Timing Device*. A stopwatch or other device must be used to measure the time of flame application and the time of flame penetration, if it occurs.

(e) *Preparation of Apparatus*. Before calibration, all equipment must be turned on and allowed to stabilize, and the burner fuel flow must be adjusted as specified in paragraph (d)(2).

(f) *Calibration*. To ensure the proper thermal output of the burner the following test must be made:

(1) Remove the burner extension from the end of the draft tube. Turn on the blower portion of the burner without turning the fuel or igniters on. Measure the air velocity using a hot wire anemometer in the center of the draft tube across the face of the opening. Adjust the damper such that the air velocity is in the range of 1550 to 1800 ft./min. If tabs are being used at the exit of the draft tube, they must be removed prior to this measurement. Reinstall the draft tube extension cone.

(2) Place the calorimeter on the test stand as shown in Figure 2 at a distance of 8 inches (203 mm) from the exit of the burner cone to simulate the position of the horizontal test specimen.

(3) Turn on the burner, allow it to run for 2 minutes for warm-up, and adjust the damper to produce a calorimeter reading of 8.0 ±0.5 BTU per ft.^{2} sec. (9.1 ±0.6 Watts/cm^2).

(4) Replace the calorimeter with the thermocouple rake (see Figure 3).

(5) Turn on the burner and ensure that each of the seven thermocouples reads 1700 °F. ±100 °F. (927 °C. ±38 °C.) to ensure steady state conditions have been achieved. If the temperature is out of this range, repeat steps 2 through 5 until proper readings are obtained.

(6) Turn off the burner and remove the thermocouple rake.

(7) Repeat (1) to ensure that the burner is in the correct range.

(g) *Test Procedure.* (1) Mount a thermocouple of the same type as that used for calibration at a distance of 4 inches (102 mm) above the horizontal (ceiling) test specimen. The thermocouple should be centered over the burner cone.

(2) Mount the test specimen on the test stand shown in Figure 1 in either the horizontal or vertical position. Mount the insulating material in the other position.

(3) Position the burner so that flames will not impinge on the specimen, turn the burner on, and allow it to run for 2 minutes. Rotate the burner to apply the flame to the specimen and simultaneously start the timing device.

(4) Expose the test specimen to the flame for 5 minutes and then turn off the burner. The test may be terminated earlier if flame penetration is observed.

(5) When testing ceiling liner panels, record the peak temperature measured 4 inches above the sample.

(6) Record the time at which flame penetration occurs if applicable.

(h) *Test Report.* The test report must include the following:

(1) A complete description of the materials tested including type, manufacturer, thickness, and other appropriate data.

(2) Observations of the behavior of the test specimens during flame exposure such as delamination, resin ignition, smoke, ect., including the time of such occurrence.

(3) The time at which flame penetration occurs, if applicable, for each of the three specimens tested.

(4) Panel orientation (ceiling or sidewall).

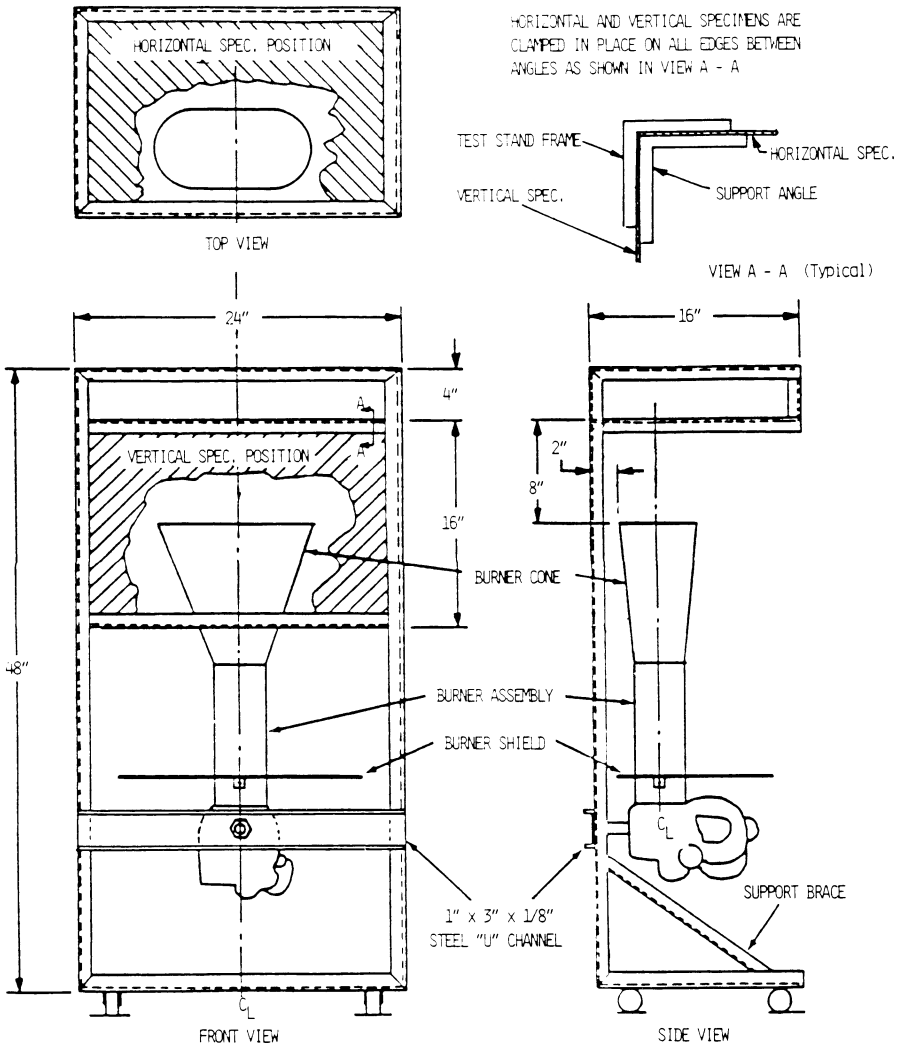

TEST STAND IS CONSTRUCTED WITH 1" x 1" x 1/8" STEEL ANGLES, ALL JOINTS WELDED
SUPPORT ANGLES ARE 1" x 1" x 1/8" CUT TO FIT

FIGURE 1. TEST APPARATUS FOR HORIZONTAL AND VERTICAL MOUNTING

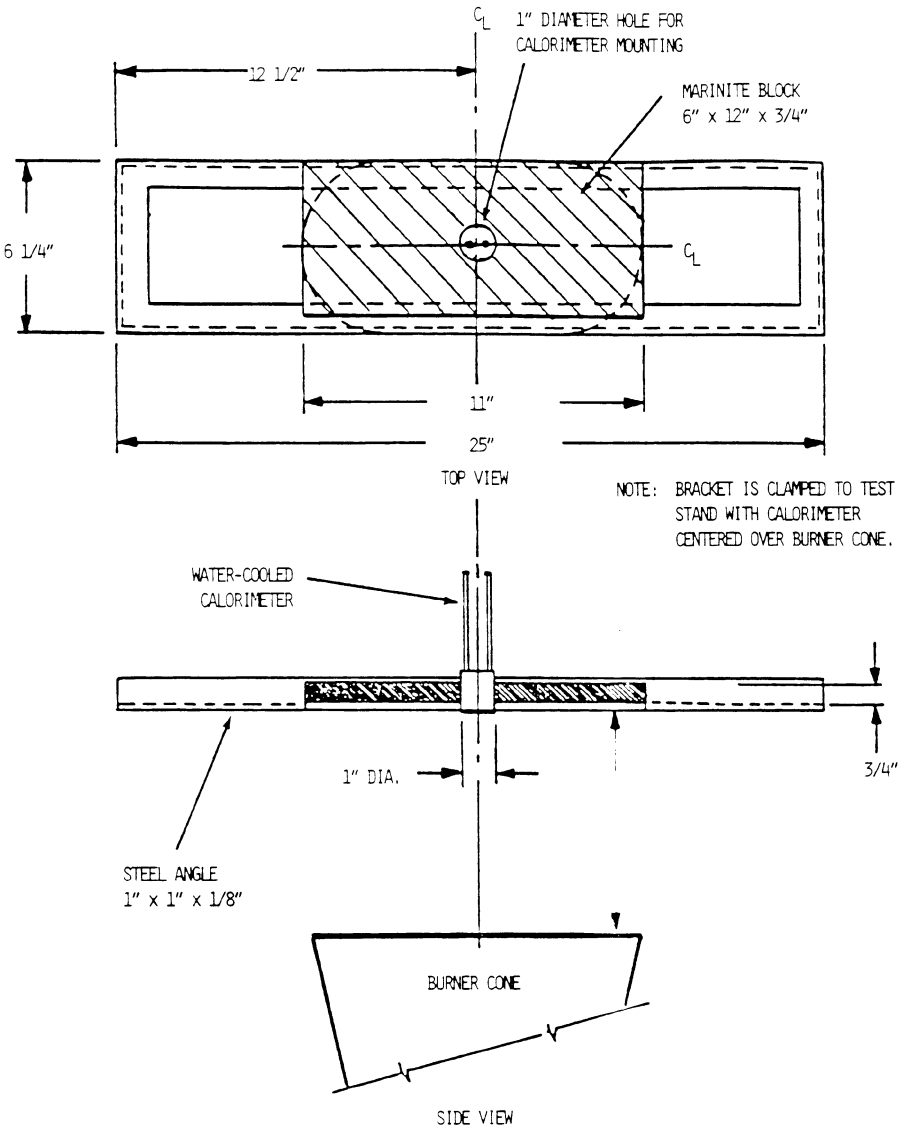

FIGURE 2. CALORIMETER BRACKET

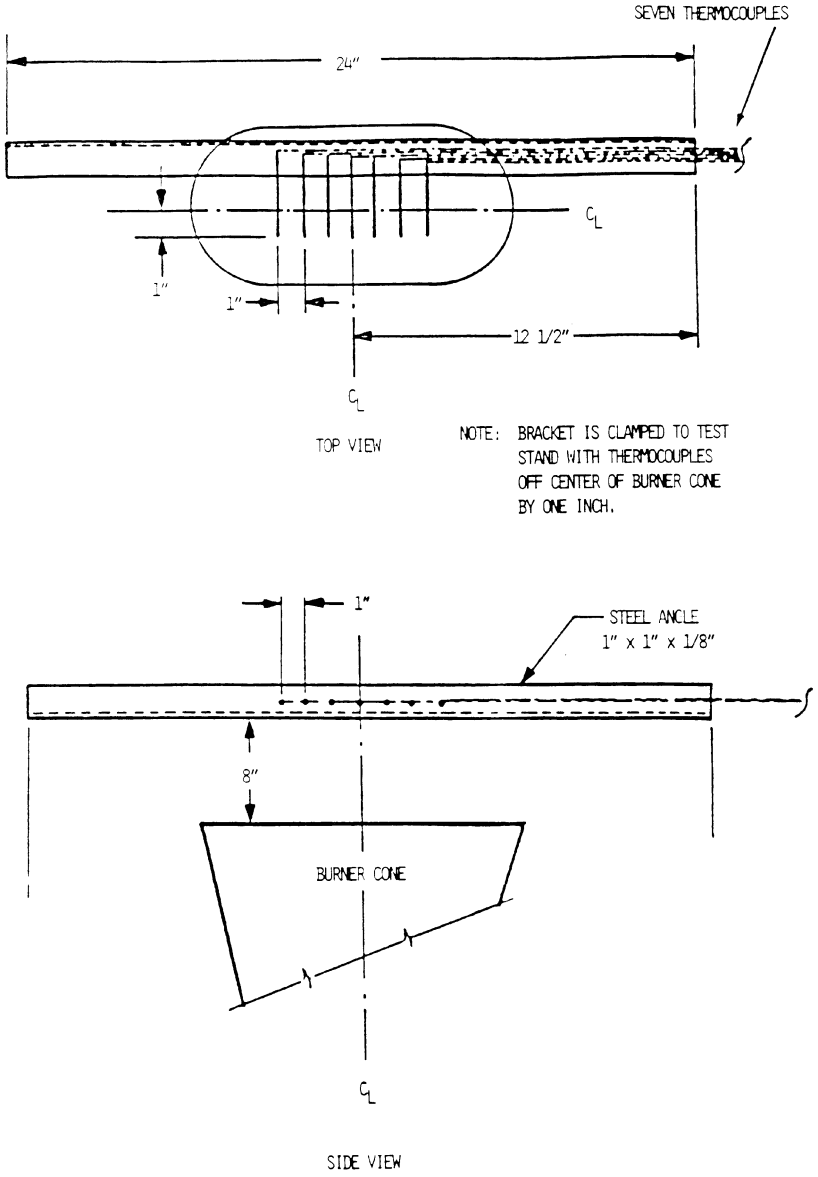

FIGURE 3. THERMOCOUPLE RAKE BRACKET

Part IV—Test Method To Determine the Heat Release Rate From Cabin Materials Exposed to Radiant Heat.

(a) *Summary of Method.* Three or more specimens representing the completed aircraft component are tested. Each test specimen is injected into an environmental chamber through which a constant flow of air passes. The specimen's exposure is determined by a radiant heat source adjusted to produce, on the specimen, the desired total heat flux of 3.5 W/cm^2. The specimen is tested with the exposed surface vertical. Combustion is initiated by piloted ignition. The combustion products leaving the chamber are monitored in order to calculate the release rate of heat.

(b) *Apparatus.* The Ohio State University (OSU) rate of heat release apparatus, as described below, is used. This is a modified version of the rate of heat release apparatus standardized by the American Society of Testing and Materials (ASTM), ASTM E–906.

(1) This apparatus is shown in Figures 1A and 1B of this part IV. All exterior surfaces of the apparatus, except the holding chamber, must be insulated with 1 inch (25 mm) thick, low density, high temperature, fiberglass board insulation. A gasketed door, through which the sample injection rod slides, must be used to form an airtight closure on the specimen hold chamber.

(2) *Thermopile.* The temperature difference between the air entering the environmental chamber and that leaving must be monitored by a thermopile having five hot, and five cold, 24-guage Chromel-Alumel junctions. The hot junctions must be spaced across the top of the exhaust stack, .38 inches (10 mm) below the top of the chimney. The thermocouples must have a .050 ±.010 inch (1.3 ±.3mm) diameter, ball-type, welded tip. One thermocouple must be located in the geometric center, with the other four located 1.18 inch (30 mm) from the center along the diagonal toward each of the corners (Figure 5 of this part IV). The cold junctions must be located in the pan below the lower air distribution plate (see paragraph (b)(4) of this part IV). Thermopile hot junctions must be cleared of soot deposits as needed to maintain the calibrated sensitivity.

(3) *Radiation Source.* A radiant heat source incorporating four Type LL silicon carbide elements, 20 inches (508 mm) long by .63 inch (16 mm) O.D., must be used, as shown in Figures 2A and 2B of this part IV. The heat source must have a nominal resistance of 1.4 ohms and be capable of generating a flux up to 100 kW/m^2. The silicone carbide elements must be mounted in the stainless steel panel box by inserting them through .63 inch (16 mm) holes in .03 inch (1 mm) thick ceramic fiber or calcium-silicate millboard. Locations of the holes in the pads and stainless steel cover plates are shown in Figure 2B of this part IV. The truncated diamond-shaped mask of .042±.002 inch (1.07±.05mm) stainless steel must be added to provide uniform heat flux density over the area occupied by the vertical sample.

(4) *Air Distribution System.* The air entering the environmental chamber must be distributed by a .25 inch (6.3 mm) thick aluminum plate having eight No. 4 drill-holes, located 2 inches (51 mm) from sides on 4 inch (102 mm) centers, mounted at the base of the environmental chamber. A second plate of 18 guage stainless steel having 120, evenly spaced, No. 28 drill holes must be mounted 6 inches (152 mm) above the aluminum plate. A well-regulated air supply is required. The air-supply manifold at the base of the pyramidal section must have 48, evenly spaced, No. 26 drill holes located .38 inch (10 mm) from the inner edge of the manifold, resulting in an airflow split of approximately three to one within the apparatus.

(5) *Exhaust Stack.* An exhaust stack, 5.25×2.75 inches (133×70 mm) in cross section, and 10 inches (254 mm) long, fabricated from 28 guage stainless steel must be mounted on the outlet of the pyramidal section. A. 1.0×3.0 inch (25×76 mm) baffle plate of .018±.002 inch (.50±.05 mm) stainless steel must be centered inside the stack, perpendicular to the air flow, 3 inches (76 mm) above the base of the stack.

(6) *Specimen Holders.* (i) The specimen must be tested in a vertical orientation. The specimen holder (Figure 3 of this part IV) must incorporate a frame that touches the specimen (which is wrapped with aluminum foil as required by paragraph (d)(3) of this Part) along only the .25 inch (6 mm) perimeter. A ''V'' shaped spring is used to hold the assembly together. A detachable .50×.50×5.91 inch (12×12×150 mm) drip pan and two .020 inch (.5 mm) stainless steel wires (as shown in Figure 3 of this part IV) must be used for testing materials prone to melting and dripping. The positioning of the spring and frame may be changed to accommodate different specimen thicknesses by inserting the retaining rod in different holes on the specimen holder.

(ii) Since the radiation shield described in ASTM E–906 is not used, a guide pin must be added to the injection mechanism. This fits into a slotted metal plate on the injection mechanism outside of the holding chamber. It can be used to provide accurate positioning of the specimen face after injection. The front surface of the specimen must be 3.9 inches (100 mm) from the closed radiation doors after injection.

(iii) The specimen holder clips onto the mounted bracket (Figure 3 of this part IV). The mounting bracket must be attached to the injection rod by three screws that pass through a wide-area washer welded onto a ½-inch (13 mm) nut. The end of the injection rod must be threaded to screw into the nut, and a .020 inch (5.1 mm) thick wide area

washer must be held between two ½-inch (13 mm) nuts that are adjusted to tightly cover the hole in the radiation doors through which the injection rod or calibration calorimeter pass.

(7) *Calorimeter*. A total-flux type calorimeter must be mounted in the center of a ½-inch Kaowool ''M'' board inserted in the sample holder to measure the total heat flux. The calorimeter must have a view angle of 180 degrees and be calibrated for incident flux. The calorimeter calibration must be acceptable to the Administrator.

(8) *Pilot-Flame Positions*. Pilot ignition of the specimen must be accomplished by simultaneously exposing the specimen to a lower pilot burner and an upper pilot burner, as described in paragraph (b)(8)(i) and (b)(8)(ii) or (b)(8)(iii) of this part IV, respectively. Since intermittent pilot flame extinguishment for more than 3 seconds would invalidate the test results, a spark ignitor may be installed to ensure that the lower pilot burner remains lighted.

(i) *Lower Pilot Burner*. The pilot-flame tubing must be .25 inch (6.3 mm) O.D., .03 inch (0.8mm) wall, stainless steel tubing. A mixture of 120 cm^3/min. of methane and 850 cm^3/min. of air must be fed to the lower pilot flame burner. The normal position of the end of the pilot burner tubing is .40 inch (10 mm) from and perpendicular to the exposed vertical surface of the specimen. The centerline at the outlet of the burner tubing must intersect the vertical centerline of the sample at a point .20 inch (5 mm) above the lower exposed edge of the specimen.

(ii) *Standard Three-Hole Upper Pilot Burner*. The pilot burner must be a straight length of .25 inch (6.3 mm) O.D., .03 inch (0.8 mm) wall, stainless steel tubing that is 14 inches (360 mm) long. One end of the tubing must be closed, and three No. 40 drill holes must be drilled into the tubing, 2.38 inch (60 mm) apart, for gas ports, all radiating in the same direction. The first hole must be .19 inch (5 mm) from the closed end of the tubing. The tube must be positioned .75 inch (19 mm) above and .75 inch (19 mm) behind the exposed upper edge of the specimen. The middle hole must be in the vertical plane perpendicular to the exposed surface of the specimen which passes through its vertical centerline and must be pointed toward the radiation source. The gas supplied to the burner must be methane and must be adjusted to produce flame lengths of 1 inch (25 mm).

(iii) *Optional Fourteen-Hole Upper Pilot Burner*. This burner may be used in lieu of the standard three-hole burner described in paragraph (b)(8)(ii) of this part IV. The pilot burner must be a straight length of .25 inch (6.3 mm) O.D., .03 inch (0.8 mm) wall, stainless steel tubing that is 15.75 inches (400 mm) long. One end of the tubing must be closed, and 14 No. 59 drill holes must be drilled into the tubing, .50 inch (13 mm) apart, for gas ports, all radiating in the same direction. The first hole must be .50 inch (13 mm) from the closed end of the tubing. The tube must be positioned above the specimen holder so that the holes are placed above the specimen as shown in Figure 1B of this part IV. The fuel supplied to the burner must be methane mixed with air in a ratio of approximately 50/50 by volume. The total gas flow must be adjusted to produce flame lengths of 1 inch (25 mm). When the gas/air ratio and the flow rate are properly adjusted, approximately .25 inch (6 mm) of the flame length appears yellow in color.

(c) *Calibration of Equipment*—(1) *Heat Release Rate*. A calibration burner, as shown in Figure 4, must be placed over the end of the lower pilot flame tubing using a gas tight connection. The flow of gas to the pilot flame must be at least 99 percent methane and must be accurately metered. Prior to usage, the wet test meter must be properly leveled and filled with distilled water to the tip of the internal pointer while no gas is flowing. Ambient temperature and pressure of the water are based on the internal wet test meter temperature. A baseline flow rate of approximately 1 liter/min. must be set and increased to higher preset flows of 4, 6, 8, 6 and 4 liters/min. Immediately prior to recording methane flow rates, a flow rate of 8 liters/min. must be used for 2 minutes to precondition the chamber. This is not recorded as part of calibration. The rate must be determined by using a stopwatch to time a complete revolution of the wet test meter for both the baseline and higher flow, with the flow returned to baseline before changing to the next higher flow. The thermopile baseline voltage must be measured. The gas flow to the burner must be increased to the higher preset flow and allowed to burn for 2.0 minutes, and the thermopile voltage must be measured. The sequence must be repeated until all five values have been determined. The average of the five values must be used as the calibration factor. The procedure must be repeated if the percent relative standard deviation is greater than 5 percent. Calculations are shown in paragraph (f) of this part IV.

(2) *Flux Uniformity*. Uniformity of flux over the specimen must be checked periodically and after each heating element change to determine if it is within acceptable limits of plus or minus 5 percent.

(3) As noted in paragraph (b)(2) of this part IV, thermopile hot junctions must be cleared of soot deposits as needed to maintain the calibrated sensitivity.

(d) *Preparation of Test Specimens*. (1) The test specimens must be representative of the aircraft component in regard to materials and construction methods. The standard size for the test specimens is 5.91 ±.03 × 5.91 ±.03 inches (149 ±1 × 149 ±1 mm). The thickness of the specimen must be the same as that of the

aircraft component it represents up to a maximum thickness of 1.75 inches (45 mm). Test specimens representing thicker components must be 1.75 inches (45 mm).

(2) *Conditioning.* Specimens must be conditioned as described in Part 1 of this appendix.

(3) *Mounting.* Each test specimen must be wrapped tightly on all sides of the specimen, except for the one surface that is exposed with a single layer of .001 inch (.025 mm) aluminum foil.

(e) *Procedure.* (1) The power supply to the radiant panel must be set to produce a radiant flux of 3.5 ±.05 W/cm^2, as measured at the point the center of the specimen surface will occupy when positioned for the test. The radiant flux must be measured after the air flow through the equipment is adjusted to the desired rate.

(2) After the pilot flames are lighted, their position must be checked as described in paragraph (b)(8) of this part IV.

(3) Air flow through the apparatus must be controlled by a circular plate orifice located in a 1.5 inch (38.1 mm) I.D. pipe with two pressure measuring points, located 1.5 inches (38 mm) upstream and .75 inches (19 mm) downstream of the orifice plate. The pipe must be connected to a manometer set at a pressure differential of 7.87 inches (200 mm) of Hg. (See Figure 1B of this part IV.) The total air flow to the equipment is approximately .04 m^3/seconds. The stop on the vertical specimen holder rod must be adjusted so that the exposed surface of the specimen is positioned 3.9 inches (100 mm) from the entrance when injected into the environmental chamber.

(4) The specimen must be placed in the hold chamber with the radiation doors closed. The airtight outer door must be secured, and the recording devices must be started. The specimen must be retained in the hold chamber for 60 seconds, plus or minus 10 seconds, before injection. The thermopile ''zero'' value must be determined during the last 20 seconds of the hold period. The sample must not be injected before completion of the ''zero'' value determination.

(5) When the specimen is to be injected, the radiation doors must be opened. After the specimen is injected into the environmental chamber, the radiation doors must be closed behind the specimen.

(6) [Reserved]

(7) Injection of the specimen and closure of the inner door marks time zero. A record of the thermopile output with at least one data point per second must be made during the time the specimen is in the environmental chamber.

(8) The test duration is five minutes. The lower pilot burner and the upper pilot burner must remain lighted for the entire duration of the test, except that there may be intermittent flame extinguishment for periods that do not exceed 3 seconds. Furthermore, if the optional three-hole upper burner is used, at least two flamelets must remain lighted for the entire duration of the test, except that there may be intermittent flame extinguishment of all three flamelets for periods that do not exceed 3 seconds.

(9) A minimum of three specimens must be tested.

(f) *Calculations.* (1) The calibration factor is calculated as follows:

$$K_h = \frac{(F_l - F_O)}{(V_l - V_O)} \times \frac{(210.8 - 22)k_{cal}}{mole} \times \frac{273}{T_a} \times \frac{P - P_v}{760} \times \frac{mole\ CH4STP}{22.41} \times \frac{WATT\ min}{.01433kcal} \times \frac{kw}{1000w}$$

F_0=flow of methane at baseline (1pm)
F_l=higher preset flow of methane (1pm)
V_0=thermopile voltage at baseline (mv)
V_l=thermopile voltage at higher flow (mv)
T_a=Ambient temperature (K)
P=Ambient pressure (mm Hg)
P_v=Water vapor pressure (mm Hg)

(2) Heat release rates may be calculated from the reading of the thermopile output voltage at any instant of time as:

$$HRR = \frac{(V_m - V_b)K_n}{.02323m^2}$$

HRR=heat release rate (kw/m^2)
V_b=baseline voltage (mv)
V_m=measured thermopile voltage (mv)
K_h=calibration factor (kw/mv)

(3) The integral of the heat release rate is the total heat release as a function of time and is calculated by multiplying the rate by the data sampling frequency in minutes and summing the time from zero to two minutes.

(g) *Criteria.* The total positive heat release over the first two minutes of exposure for each of the three or more samples tested must be averaged, and the peak heat release rate for each of the samples must be averaged. The average total heat release must not exceed 65 kilowatt-minutes per square meter, and the average peak heat release rate must not exceed 65 kilowatts per square meter.

(h) *Report.* The test report must include the following for each specimen tested:

(1) Description of the specimen.

(2) Radiant heat flux to the specimen, expressed in W/cm^2.

(3) Data giving release rates of heat (in kW/m^2) as a function of time, either graphically or tabulated at intervals no greater than 10 seconds. The calibration factor (k_n) must be recorded.

(4) If melting, sagging, delaminating, or other behavior that affects the exposed surface area or the mode of burning occurs, these behaviors must be reported, together with the time at which such behaviors were observed.

(5) The peak heat release and the 2-minute integrated heat release rate must be reported.

FIGURES TO PART IV OF APPENDIX F

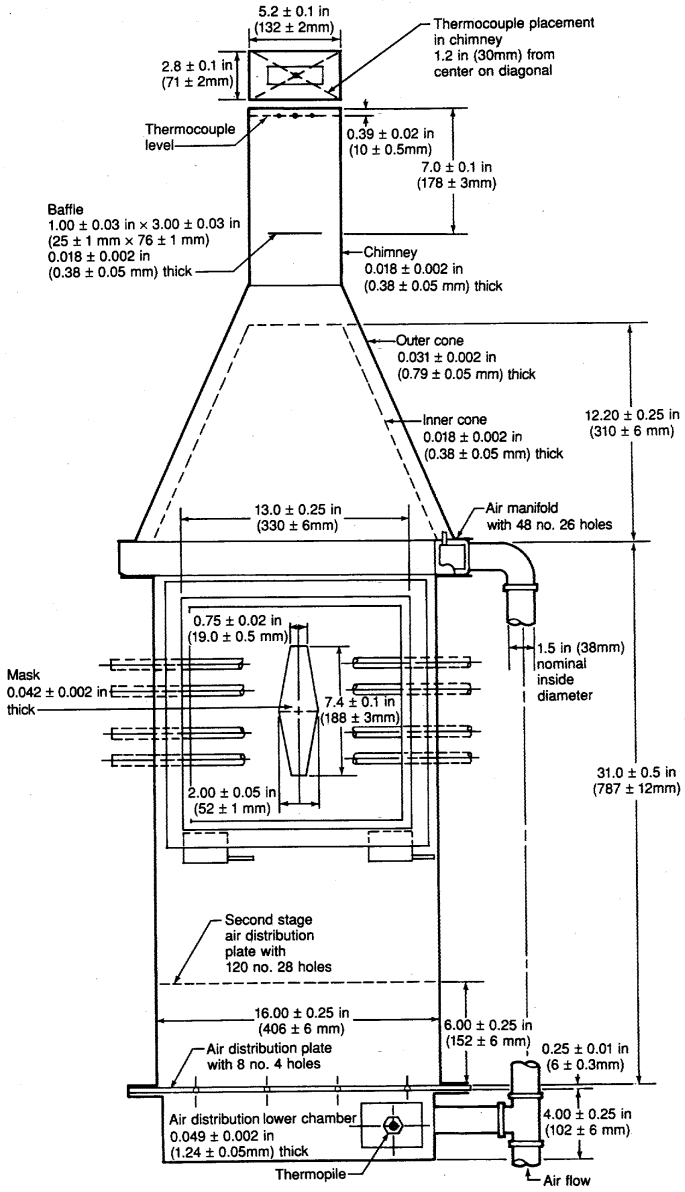

Figure 1A Rate of Heat Release Apparatus

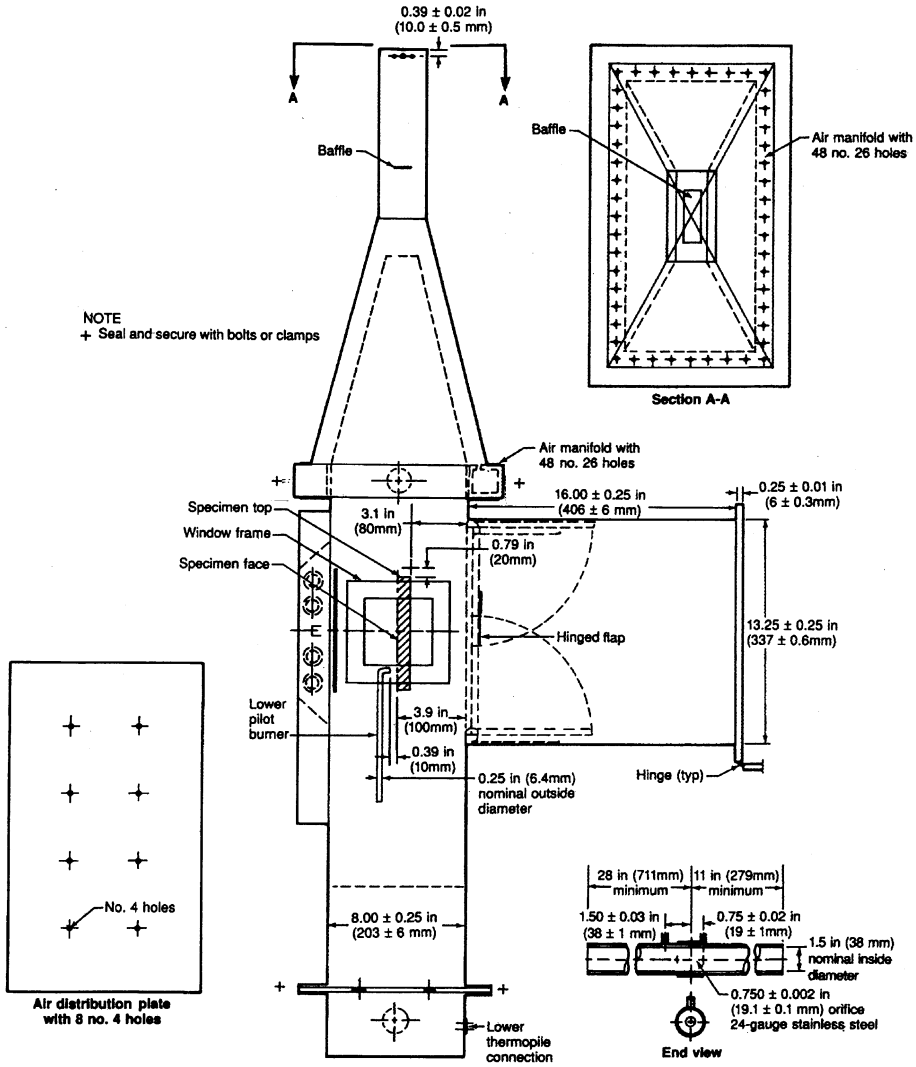

Figure 1B

Rate of Heat Release Apparatus

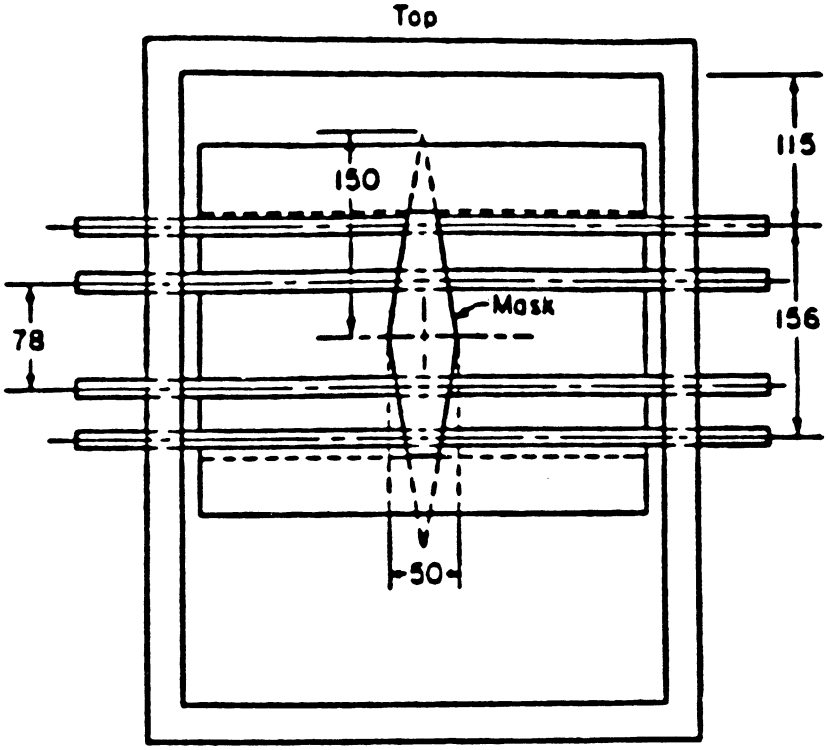

(Unless denoted otherwise all dimensions are in millimeters.)
Figure 2A. "Globar" Radiant Panel

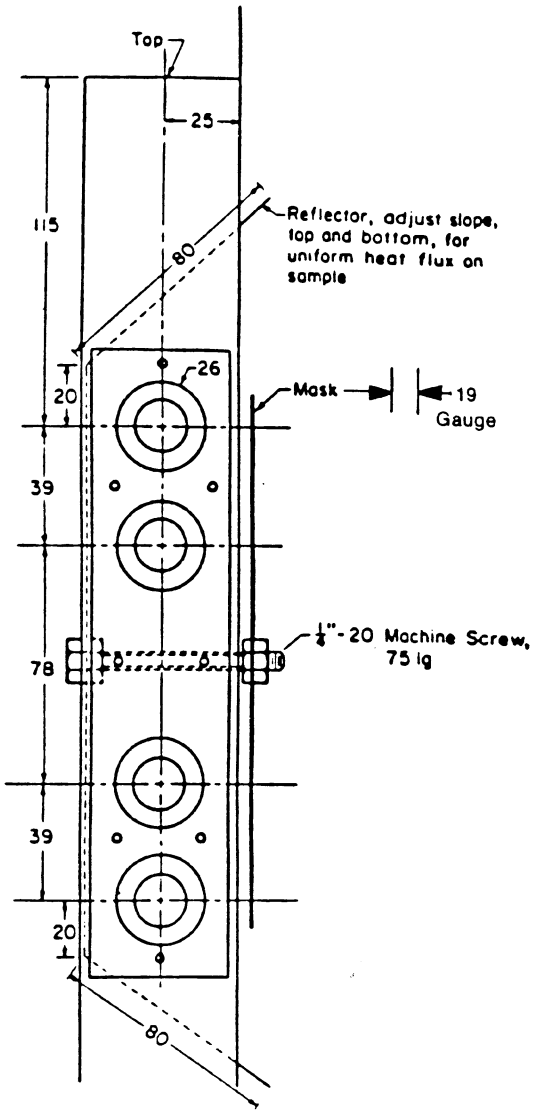

(Unless denoted otherwise all dimensions are in millimeters.)
Figure 2B. "Globar" Radiant Panel

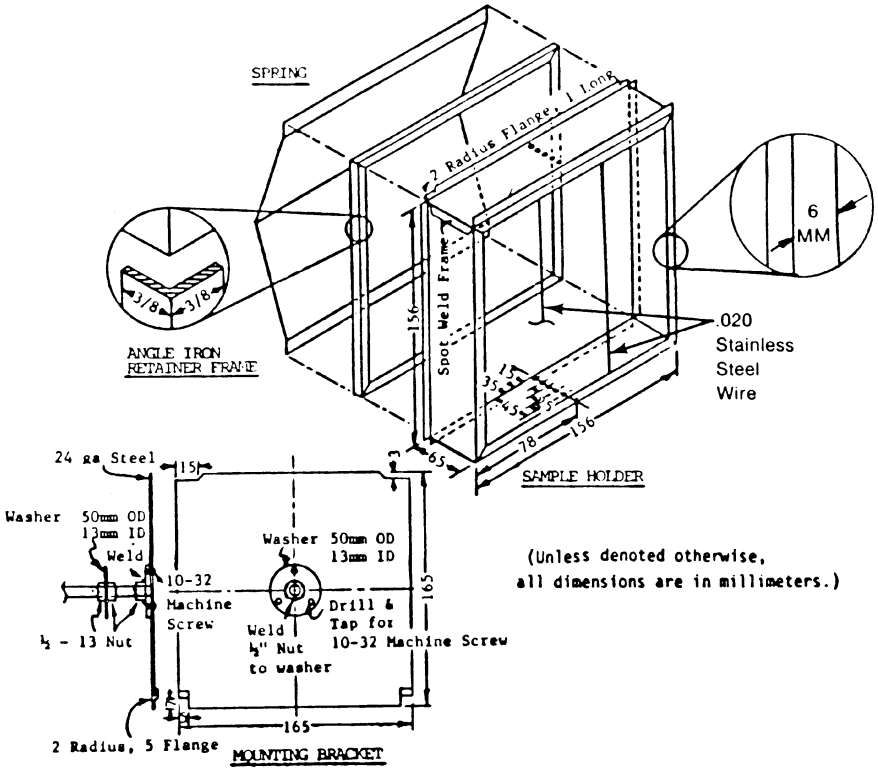
SPRING
2 Radius Flange, 1 Long
6 MM
3/8
3/8
ANGLE IRON RETAINER FRAME
Spot Weld Frame
156
.020 Stainless Steel Wire
35
45
65
78
156
65
SAMPLE HOLDER
24 ga Steel
15
Washer 50mm OD 13mm ID
Weld
10-32 Machine Screw
½ - 13 Nut
Washer 50mm OD 13mm ID
Drill & Tap for 10-32 Machine Screw
Weld ½" Nut to washer
165
165
2 Radius, 5 Flange
MOUNTING BRACKET
(Unless denoted otherwise, all dimensions are in millimeters.)

Figure 3.

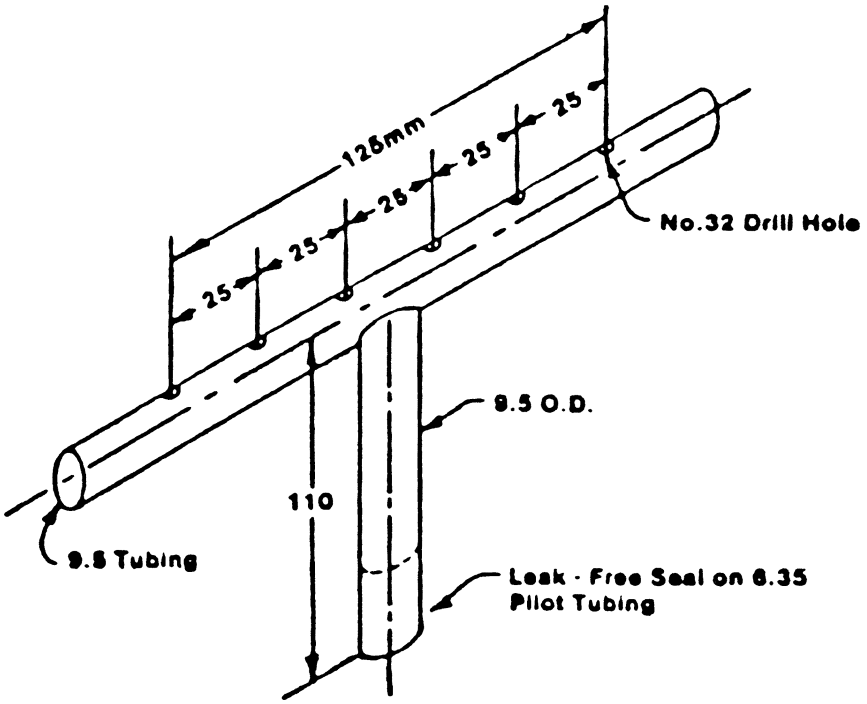

(Unless denoted otherwise, all dimensions are in millimeters.)

Figure 4.

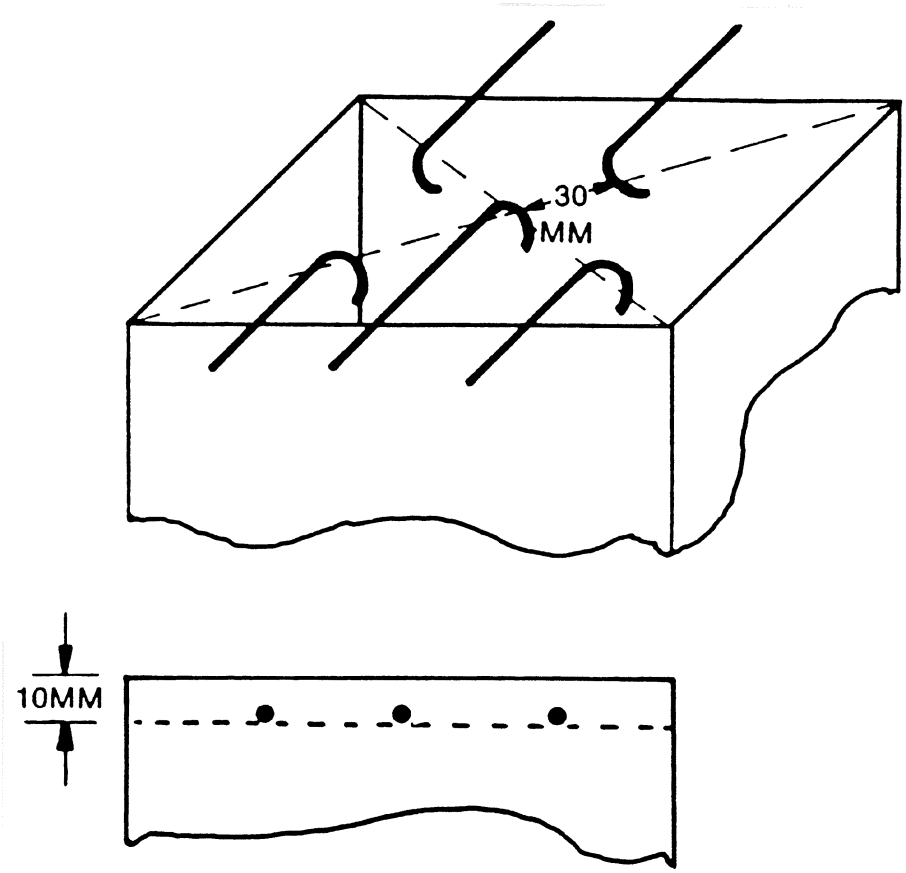

Figure 5. Thermocouple Position

Part V. Test Method To Determine the Smoke Emission Characteristics of Cabin Materials

(a) *Summary of Method.* The specimens must be constructed, conditioned, and tested in the flaming mode in accordance with American Society of Testing and Materials (ASTM) Standard Test Method ASTM F814–83.

(b) *Acceptance Criteria.* The specific optical smoke density (D_s), which is obtained by averaging the reading obtained after 4 minutes with each of the three specimens, shall not exceed 200.

Part VI—Test Method To Determine the Flammability and Flame Propagation Characteristics of Thermal/Acoustic Insulation Materials

Use this test method to evaluate the flammability and flame propagation characteristics of thermal/acoustic insulation when exposed to both a radiant heat source and a flame.

(a) *Definitions.*

''Flame propagation'' means the furthest distance of the propagation of visible flame towards the far end of the test specimen, measured from the midpoint of the ignition source flame. Measure this distance after initially applying the ignition source and before all flame on the test specimen is extinguished. The measurement is not a determination of burn length made after the test.

''Radiant heat source'' means an electric or air propane panel.

''Thermal/acoustic insulation'' means a material or system of materials used to provide thermal and/or acoustic protection. Examples include fiberglass or other batting material encapsulated by a film covering and foams.

''Zero point'' means the point of application of the pilot burner to the test specimen.

(b) *Test apparatus.*

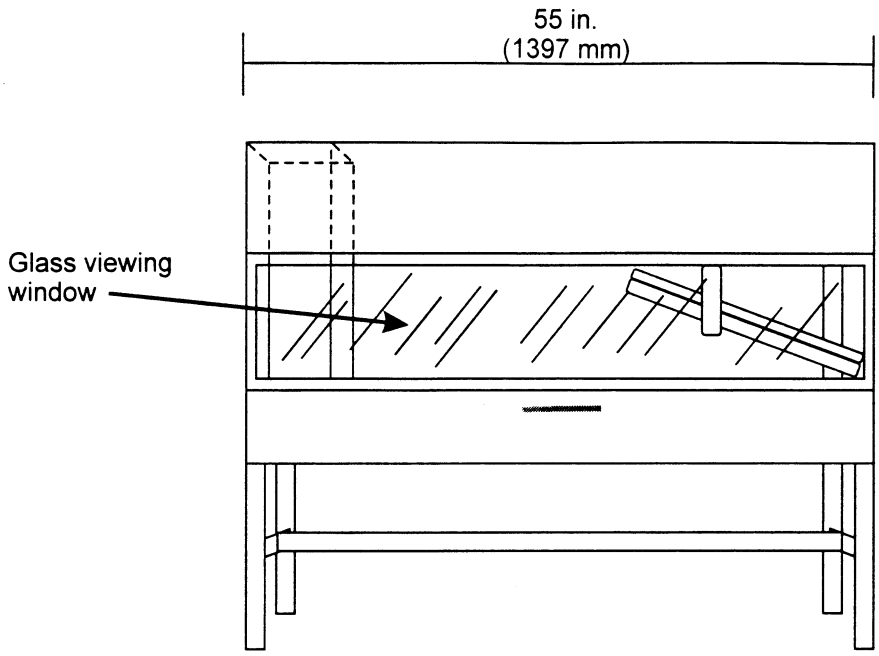

Figure 1 - Radiant Panel Test Chamber

(1) *Radiant panel test chamber.* Conduct tests in a radiant panel test chamber (see figure 1 above). Place the test chamber under an exhaust hood to facilitate clearing the chamber of smoke after each test. The radiant panel test chamber must be an enclosure 55 inches (1397 mm) long by 19.5 (495 mm) deep by 28 (710 mm) to 30 inches (maximum) (762 mm) above the test specimen. Insulate the sides, ends, and top with a fibrous ceramic insulation, such as Kaowool M™ board. On the front side, provide a 52 by 12-inch (1321 by 305 mm) draft-free, high-temperature, glass window for viewing the sample during testing. Place a door below the window to provide access to the movable specimen platform holder. The bottom of the test chamber must be a sliding steel platform that has provision for securing the test specimen holder in a fixed and level position. The chamber must have an internal chimney with exterior dimensions of 5.1 inches (129 mm) wide, by 16.2 inches (411 mm) deep by 13 inches (330 mm) high at the opposite end of the chamber from the radiant energy source. The interior dimensions must be 4.5 inches (114 mm) wide by 15.6 inches (395 mm) deep. The chimney must extend to the top of the chamber (see figure 2).

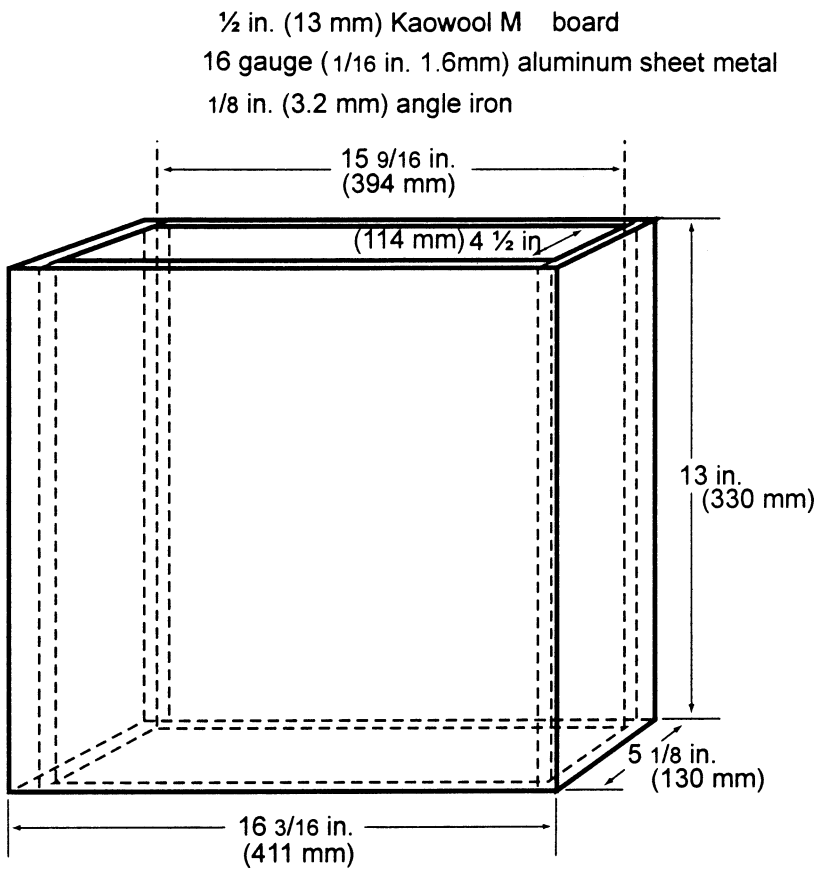

Figure 2 - Internal Chimney

(2) *Radiant heat source.* Mount the radiant heat energy source in a cast iron frame or equivalent. An electric panel must have six, 3-inch wide emitter strips. The emitter strips must be perpendicular to the length of the panel. The panel must have a radiation surface of 12⅞ by 18½ inches (327 by 470 mm). The panel must be capable of operating at temperatures up to 1300 °F (704 °C). An air propane panel must be made of a porous refractory material and have a radiation surface of 12 by 18 inches (305 by 457 mm). The panel must be capable of operating at temperatures up to 1,500 °F (816 °C). *See* figures 3a and 3b.

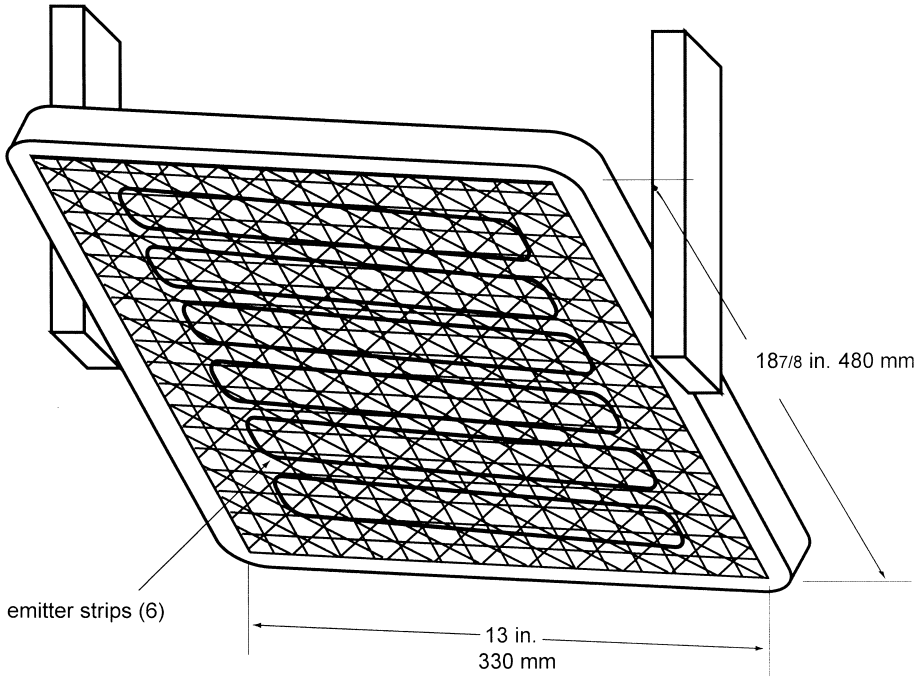

Figure 3a – Electric Panel

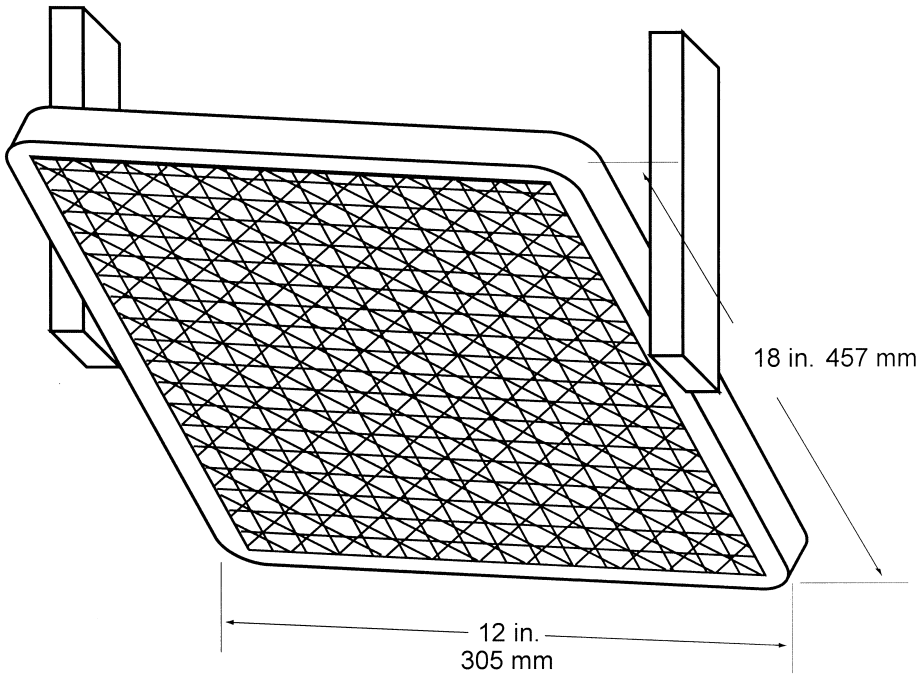

Figure 3b – Air Propane Radiant Panel

(i) *Electric radiant panel.* The radiant panel must be 3-phase and operate at 208 volts. A single-phase, 240 volt panel is also acceptable. Use a solid-state power controller and microprocessor-based controller to set the electric panel operating parameters.

(ii) *Gas radiant panel.* Use propane (liquid petroleum gas—2.1 UN 1075) for the radiant panel fuel. The panel fuel system must consist of a venturi-type aspirator for mixing gas and air at approximately atmospheric pressure. Provide suitable instrumentation for monitoring and controlling the flow of fuel and air to the panel. Include an air flow gauge, an air flow regulator, and a gas pressure gauge.

(iii) *Radiant panel placement.* Mount the panel in the chamber at 30° to the horizontal specimen plane, and 7½ inches above the zero point of the specimen.

(3) *Specimen holding system.*

(i) The sliding platform serves as the housing for test specimen placement. Brackets may be attached (via wing nuts) to the top lip of the platform in order to accommodate various thicknesses of test specimens. Place the test specimens on a sheet of Kaowool M™ board or 1260 Standard Board (manufactured by Thermal Ceramics and available in Europe), or equivalent, either resting on the bottom lip of the sliding platform or on the base of the brackets. It may be necessary to use multiple sheets of material based on the thickness of the test specimen (to meet the sample height requirement). Typically, these non-combustible sheets of material are available in ¼ inch (6 mm) thicknesses. See figure 4. A sliding platform that is deeper than the 2-inch (50.8mm) platform shown in figure 4 is also acceptable as long as the sample height requirement is met.

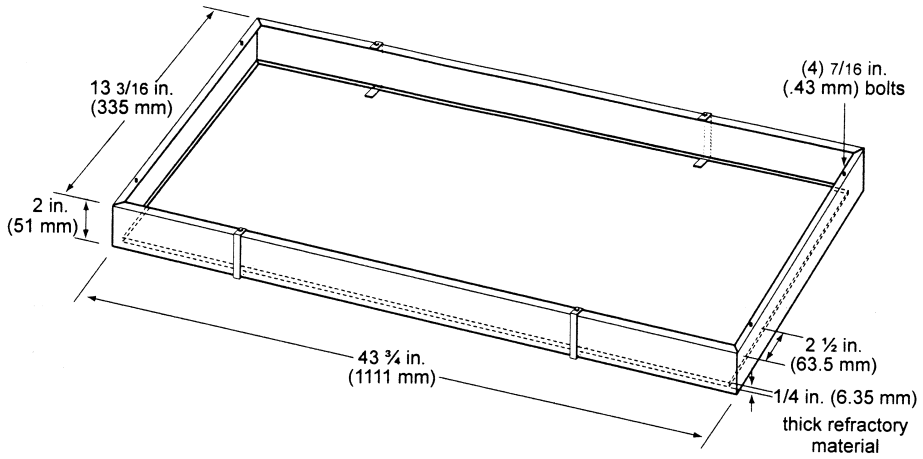

Figure 4 - Sliding Platform

(ii) Attach a ½ inch (13 mm) piece of Kaowool M™ board or other high temperature material measuring 41½ by 8¼ inches (1054 by 210 mm) to the back of the platform. This board serves as a heat retainer and protects the test specimen from excessive preheating. The height of this board must not impede the sliding platform movement (in and out of the test chamber). If the platform has been fabricated such that the back side of the platform is high enough to prevent excess preheating of the specimen when the sliding platform is out, a retainer board is not necessary.

(iii) Place the test specimen horizontally on the non-combustible board(s). Place a steel retaining/securing frame fabricated of mild steel, having a thickness of ⅛ inch (3.2 mm) and overall dimensions of 23 by 13⅛ inches (584 by 333 mm) with a specimen opening of 19 by 10¾ inches (483 by 273 mm) over the test specimen. The front, back, and right portions of the top flange of the frame must rest on the top of the sliding platform, and the bottom flanges must pinch all 4 sides of the test specimen. The right bottom flange must be flush with the sliding platform. See figure 5.

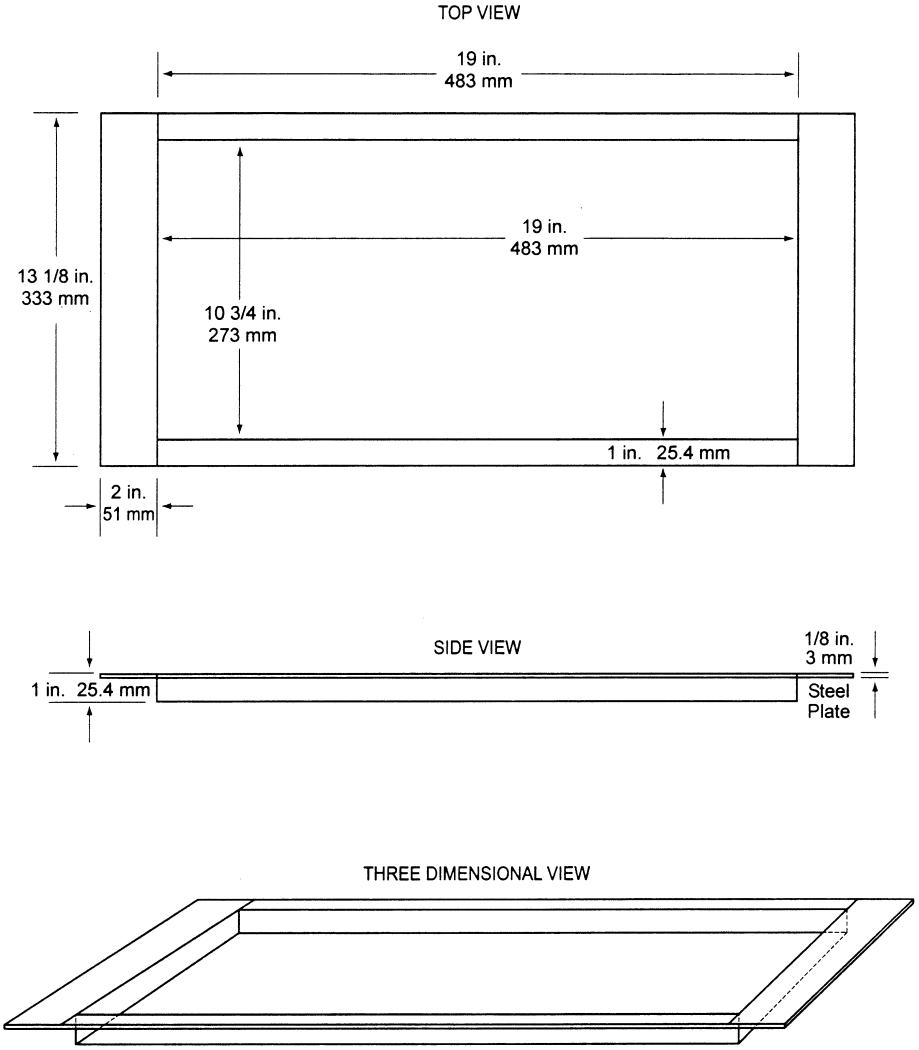

Figure 5: 3 views

(4) *Pilot Burner*. The pilot burner used to ignite the specimen must be a Bernzomatic™ commercial propane venturi torch with an axially symmetric burner tip and a propane supply tube with an orifice diameter of 0.006 inches (0.15 mm). The length of the burner tube must be 2⅞ inches (71 mm). The propane flow must be adjusted via gas pressure through an in-line regulator to produce a blue inner cone length of ¾ inch (19 mm). A ¾ inch (19 mm) guide (such as a thin strip of metal) may be soldered to the top of the burner to aid in setting the flame height. The overall flame length must be approximately 5 inches long (127 mm). Provide a way to move the burner out of the ignition position so that the flame is horizontal and at least 2 inches (50 mm) above the specimen plane. See figure 6.

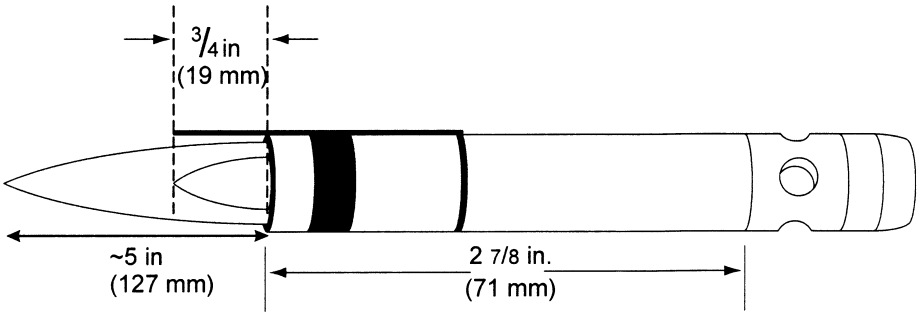

Figure 6 – Propane Pilot Burner

(5) *Thermocouples.* Install a 24 American Wire Gauge (AWG) Type K (Chromel-Alumel) thermocouple in the test chamber for temperature monitoring. Insert it into the chamber through a small hole drilled through the back of the chamber. Place the thermocouple so that it extends 11 inches (279 mm) out from the back of the chamber wall, 11½ inches (292 mm) from the right side of the chamber wall, and is 2 inches (51 mm) below the radiant panel. The use of other thermocouples is optional.

(6) *Calorimeter.* The calorimeter must be a one-inch cylindrical water-cooled, total heat flux density, foil type Gardon Gage that has a range of 0 to 5 BTU/ft^2-second (0 to 5.7 Watts/cm^2).

(7) *Calorimeter calibration specification and procedure.*

(i) *Calorimeter specification.*

(A) Foil diameter must be 0.25 ±0.005 inches (6.35 ±0.13 mm).

(B) Foil thickness must be 0.0005 ±0.0001 inches (0.013 ±0.0025 mm).

(C) Foil material must be thermocouple grade Constantan.

(D) Temperature measurement must be a Copper Constantan thermocouple.

(E) The copper center wire diameter must be 0.0005 inches (0.013 mm).

(F) The entire face of the calorimeter must be lightly coated with ''Black Velvet'' paint having an emissivity of 96 or greater.

(ii) *Calorimeter calibration.*

(A) The calibration method must be by comparison to a like standardized transducer.

(B) The standardized transducer must meet the specifications given in paragraph VI(b)(6) of this appendix.

(C) Calibrate the standard transducer against a primary standard traceable to the National Institute of Standards and Technology (NIST).

(D) The method of transfer must be a heated graphite plate.

(E) The graphite plate must be electrically heated, have a clear surface area on each side of the plate of at least 2 by 2 inches (51 by 51 mm), and be ⅛ inch ±1/16 inch thick (3.2 ±1.6 mm).

(F) Center the 2 transducers on opposite sides of the plates at equal distances from the plate.

(G) The distance of the calorimeter to the plate must be no less than 0.0625 inches (1.6 mm), nor greater than 0.375 inches (9.5 mm).

(H) The range used in calibration must be at least 0–3.5 BTUs/ft^2 second (0–3.9 Watts/cm^2) and no greater than 0–5.7 BTUs/ft^2 second (0–6.4 Watts/cm^2).

(I) The recording device used must record the 2 transducers simultaneously or at least within 1/10 of each other.

(8) *Calorimeter fixture.* With the sliding platform pulled out of the chamber, install the calorimeter holding frame and place a sheet of non-combustible material in the bottom of the sliding platform adjacent to the holding frame. This will prevent heat losses during calibration. The frame must be 13⅛ inches (333 mm) deep (front to back) by 8 inches (203 mm) wide and must rest on the top of the sliding platform. It must be fabricated of ⅛ inch (3.2 mm) flat stock steel and have an opening that accommodates a ½ inch (12.7 mm) thick piece of refractory board, which is level with the top of the sliding platform. The board must have three 1-inch (25.4 mm) diameter holes drilled through the board for calorimeter insertion. The distance to the radiant panel surface from the centerline of the first hole (''zero'' position) must be 7½ ±⅛ inches (191 ±3 mm). The distance between the centerline of the first hole to the centerline of the second hole must be 2 inches (51 mm). It must also be the same distance from the centerline of the second hole to the centerline of the third hole. *See* figure 7. A calorimeter holding frame that differs in construction is acceptable as long as the height from the centerline of the

first hole to the radiant panel and the distance between holes is the same as described in this paragraph.

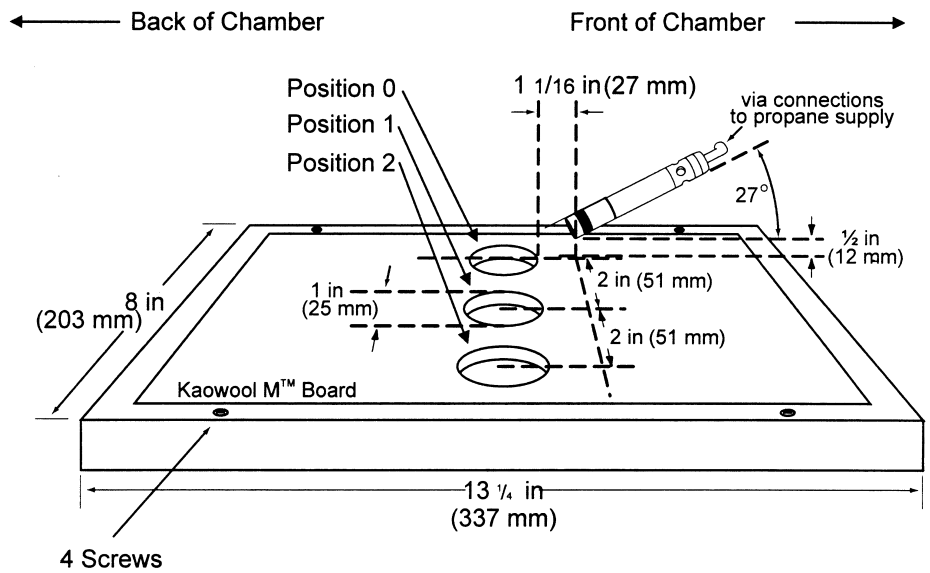

Figure 7 - Calorimeter Holding Frame

(9) *Instrumentation*. Provide a calibrated recording device with an appropriate range or a computerized data acquisition system to measure and record the outputs of the calorimeter and the thermocouple. The data acquisition system must be capable of recording the calorimeter output every second during calibration.

(10) *Timing device*. Provide a stopwatch or other device, accurate to ±1 second/hour, to measure the time of application of the pilot burner flame.

(c) *Test specimens*.

(1) *Specimen preparation*. Prepare and test a minimum of three test specimens. If an oriented film cover material is used, prepare and test both the warp and fill directions.

(2) *Construction*. Test specimens must include all materials used in construction of the insulation (including batting, film, scrim, tape etc.). Cut a piece of core material such as foam or fiberglass, and cut a piece of film cover material (if used) large enough to cover the core material. Heat sealing is the preferred method of preparing fiberglass samples, since they can be made without compressing the fiberglass (''box sample''). Cover materials that are not heat sealable may be stapled, sewn, or taped as long as the cover material is over-cut enough to be drawn down the sides without compressing the core material. The fastening means should be as continuous as possible along the length of the seams. The specimen thickness must be of the same thickness as installed in the airplane.

(3) *Specimen Dimensions*. To facilitate proper placement of specimens in the sliding platform housing, cut non-rigid core materials, such as fiberglass, 12½ inches (318mm) wide by 23 inches (584mm) long. Cut rigid materials, such as foam, 11½ ±¼ inches (292 mm ±6mm) wide by 23 inches (584mm) long in order to fit properly in the sliding platform housing and provide a flat, exposed surface equal to the opening in the housing.

(d) *Specimen conditioning*. Condition the test specimens at 70 ±5 °F (21 ±2°C) and 55% ±10% relative humidity, for a minimum of 24 hours prior to testing.

(e) *Apparatus Calibration*.(1) With the sliding platform out of the chamber, install the calorimeter holding frame. Push the platform back into the chamber and insert the calorimeter into the first hole (''zero'' position). *See* figure 7. Close the bottom door located below the sliding platform. The distance from the centerline of the calorimeter

to the radiant panel surface at this point must be 7.½ inches ±⅛ (191 mm ±3). Prior to igniting the radiant panel, ensure that the calorimeter face is clean and that there is water running through the calorimeter.

(2) Ignite the panel. Adjust the fuel/air mixture to achieve 1.5 BTUs/ft²-second ±5% (1.7 Watts/cm² ±5%) at the ''zero'' position. If using an electric panel, set the power controller to achieve the proper heat flux. Allow the unit to reach steady state (this may take up to 1 hour). The pilot burner must be off and in the down position during this time.

(3) After steady-state conditions have been reached, move the calorimeter 2 inches (51 mm) from the ''zero'' position (first hole) to position 1 and record the heat flux. Move the calorimeter to position 2 and record the heat flux. Allow enough time at each position for the calorimeter to stabilize. Table 1 depicts typical calibration values at the three positions.

TABLE 1—CALIBRATION TABLE

Position	BTU's/ft²sec	Watts/cm²
''Zero'' Position	1.5	1.7
Position 1	1.51–1.50–1.49	1.71–1.70–1.69
Position 2	1.43–1.44	1.62–1.63

(4) Open the bottom door, remove the calorimeter and holder fixture. Use caution as the fixture is very hot.

(f) *Test Procedure.*

(1) Ignite the pilot burner. Ensure that it is at least 2 inches (51 mm) above the top of the platform. The burner must not contact the specimen until the test begins.

(2) Place the test specimen in the sliding platform holder. Ensure that the test sample surface is level with the top of the platform. At ''zero'' point, the specimen surface must be 7½ inches ±⅛ inch (191 mm ±3) below the radiant panel.

(3) Place the retaining/securing frame over the test specimen. It may be necessary (due to compression) to adjust the sample (up or down) in order to maintain the distance from the sample to the radiant panel (7½ inches ±⅛ inch (191 mm±3) at ''zero'' position). With film/fiberglass assemblies, it is critical to make a slit in the film cover to purge any air inside. This allows the operator to maintain the proper test specimen position (level with the top of the platform) and to allow ventilation of gases during testing. A longitudinal slit, approximately 2 inches (51mm) in length, must be centered 3 inches ±½ inch (76mm±13mm) from the left flange of the securing frame. A utility knife is acceptable for slitting the film cover.

(4) Immediately push the sliding platform into the chamber and close the bottom door.

(5) Bring the pilot burner flame into contact with the center of the specimen at the ''zero'' point and simultaneously start the timer. The pilot burner must be at a 27° angle with the sample and be approximately ½ inch (12 mm) above the sample. *See* figure 7. A stop, as shown in figure 8, allows the operator to position the burner correctly each time.

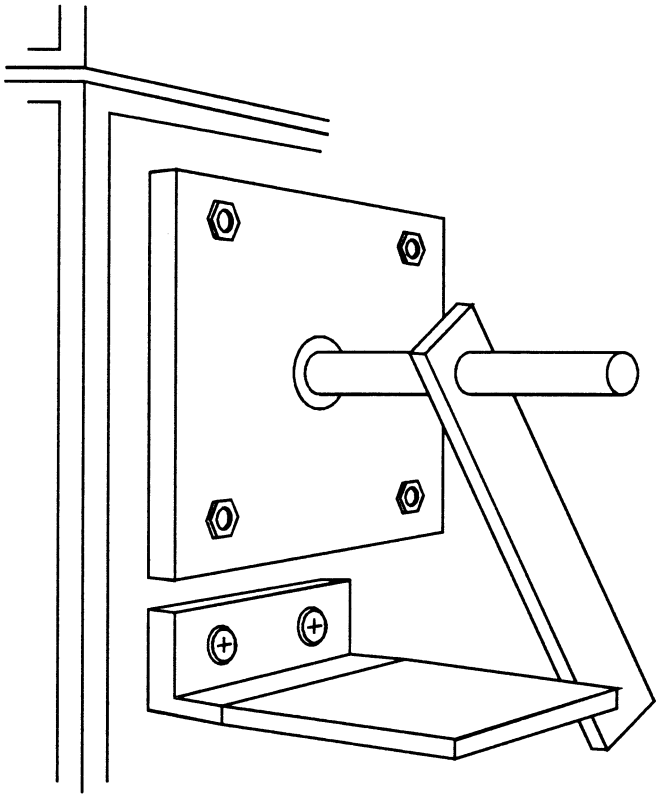

Figure 8 - Propane Burner Stop

(6) Leave the burner in position for 15 seconds and then remove to a position at least 2 inches (51 mm) above the specimen.

(g) Report.

(1) Identify and describe the test specimen.

(2) Report any shrinkage or melting of the test specimen.

(3) Report the flame propagation distance. If this distance is less than 2 inches, report this as a pass (no measurement required).

(4) Report the after-flame time.

(h) *Requirements.*

(1) There must be no flame propagation beyond 2 inches (51 mm) to the left of the centerline of the pilot flame application.

(2) The flame time after removal of the pilot burner may not exceed 3 seconds on any specimen.

Part VII—Test Method To Determine the Burnthrough Resistance of Thermal/Acoustic Insulation Materials

Use the following test method to evaluate the burnthrough resistance characteristics

of aircraft thermal/acoustic insulation materials when exposed to a high intensity open flame.

(a) *Definitions.*

Burnthrough time means the time, in seconds, for the burner flame to penetrate the test specimen, and/or the time required for the heat flux to reach 2.0 Btu/ft^{2}sec (2.27 W/cm^2) on the inboard side, at a distance of 12 inches (30.5 cm) from the front surface of the insulation blanket test frame, whichever is sooner. The burnthrough time is measured at the inboard side of each of the insulation blanket specimens.

Insulation blanket specimen means one of two specimens positioned in either side of the test rig, at an angle of 30° with respect to vertical.

Specimen set means two insulation blanket specimens. Both specimens must represent the same production insulation blanket construction and materials, proportioned to correspond to the specimen size.

(b) *Apparatus.*

(1) The arrangement of the test apparatus is shown in figures 1 and 2 and must include the capability of swinging the burner away from the test specimen during warm-up.

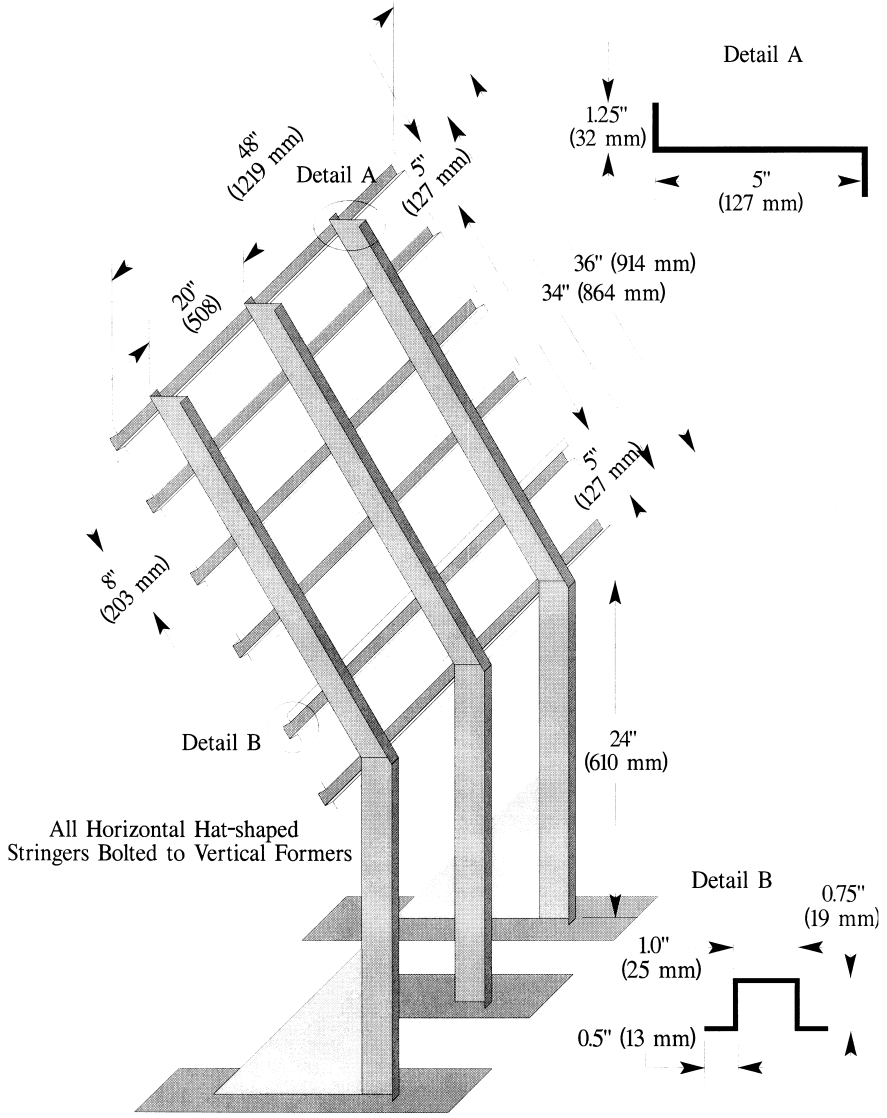

Figure 1 - Burnthrough Test Apparatus Specimen Holder

(2) *Test burner*. The test burner must be a modified gun-type such as the Park Model DPL 3400. Flame characteristics are highly dependent on actual burner setup. Parameters such as fuel pressure, nozzle depth, stator position, and intake airflow must be properly adjusted to achieve the correct flame output.

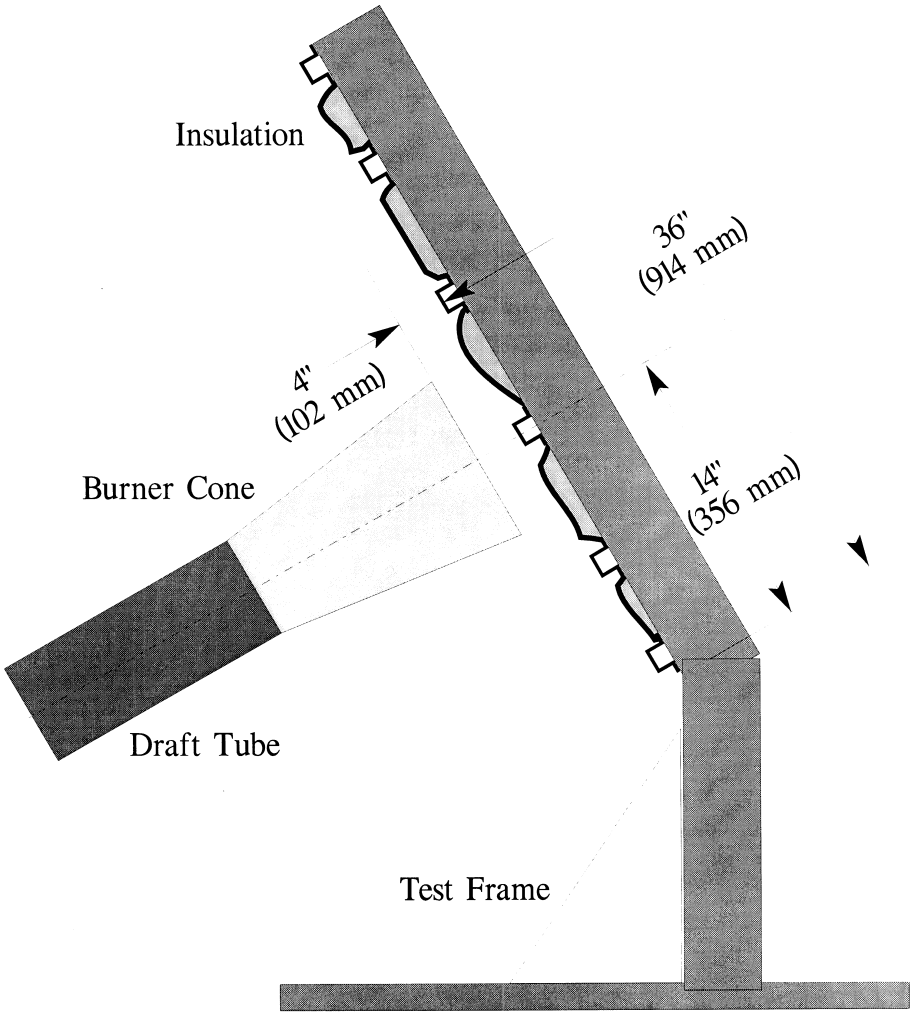

Figure 2 – Burnthrough Test Apparatus

(i) *Nozzle*. A nozzle must maintain the fuel pressure to yield a nominal 6.0 gal/hr (0.378 L/min) fuel flow. A Monarch-manufactured 80° PL (hollow cone) nozzle nominally rated at 6.0 gal/hr at 100 lb/in^2 (0.71 MPa) delivers a proper spray pattern.

(ii) *Fuel Rail*. The fuel rail must be adjusted to position the fuel nozzle at a depth of 0.3125 inch (8 mm) from the end plane of the exit stator, which must be mounted in the end of the draft tube.

(iii) *Internal Stator*. The internal stator, located in the middle of the draft tube, must

be positioned at a depth of 3.75 inches (95 mm) from the tip of the fuel nozzle. The stator must also be positioned such that the integral igniters are located at an angle midway between the 10 and 11 o'clock position, when viewed looking into the draft tube. Minor deviations to the igniter angle are acceptable if the temperature and heat flux requirements conform to the requirements of paragraph VII(e) of this appendix.

(iv) *Blower Fan*. The cylindrical blower fan used to pump air through the burner must measure 5.25 inches (133 mm) in diameter by 3.5 inches (89 mm) in width.

(v) *Burner cone*. Install a 12 +0.125-inch (305 ±3 mm) burner extension cone at the end of the draft tube. The cone must have an opening 6 ±0.125-inch (152 ±3 mm) high and 11 ±0.125-inch (280 ±3 mm) wide (see figure 3).

(vi) *Fuel*. Use JP–8, Jet A, or their international equivalent, at a flow rate of 6.0 ±0.2 gal/hr (0.378 ±0.0126 L/min). If this fuel is unavailable, ASTM K2 fuel (Number 2 grade kerosene) or ASTM D2 fuel (Number 2 grade fuel oil or Number 2 diesel fuel) are acceptable if the nominal fuel flow rate, temperature, and heat flux measurements conform to the requirements of paragraph VII(e) of this appendix.

(vii) *Fuel pressure regulator*. Provide a fuel pressure regulator, adjusted to deliver a nominal 6.0 gal/hr (0.378 L/min) flow rate. An operating fuel pressure of 100 lb/in^2 (0.71 MPa) for a nominally rated 6.0 gal/hr 80° spray angle nozzle (such as a PL type) delivers 6.0 ±0.2 gal/hr (0.378 ±0.0126 L/min).

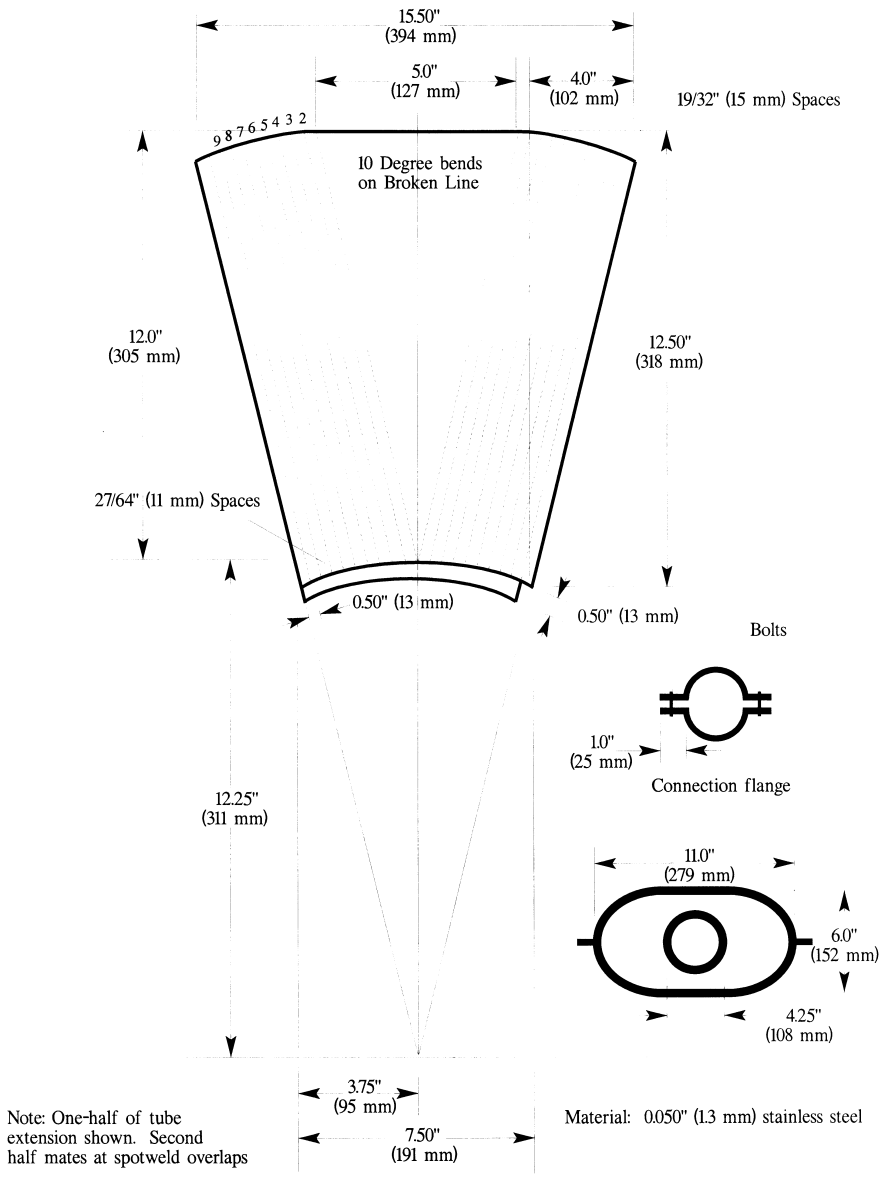

Figure 3 – Burner Draft Tube Extension Cone Diagram

(3) *Calibration rig and equipment.*

(i) Construct individual calibration rigs to incorporate a calorimeter and thermocouple rake for the measurement of heat flux and temperature. Position the calibration rigs to allow movement of the burner from the test rig position to either the heat flux or temperature position with minimal difficulty.

(ii) *Calorimeter*. The calorimeter must be a total heat flux, foil type Gardon Gage of an appropriate range such as 0–20 Btu/ft^2-sec (0–22.7 W/cm^2), accurate to ±3% of the indicated reading. The heat flux calibration method must be in accordance with paragraph VI(b)(7) of this appendix.

(iii) *Calorimeter mounting*. Mount the calorimeter in a 6- by 12- ±0.125 inch (152- by 305-±3 mm) by 0.75 ±0.125 inch (19 mm ±3 mm) thick insulating block which is attached to the heat flux calibration rig during calibration (figure 4). Monitor the insulating block for deterioration and replace it when necessary. Adjust the mounting as necessary to ensure that the calorimeter face is parallel to the exit plane of the test burner cone.

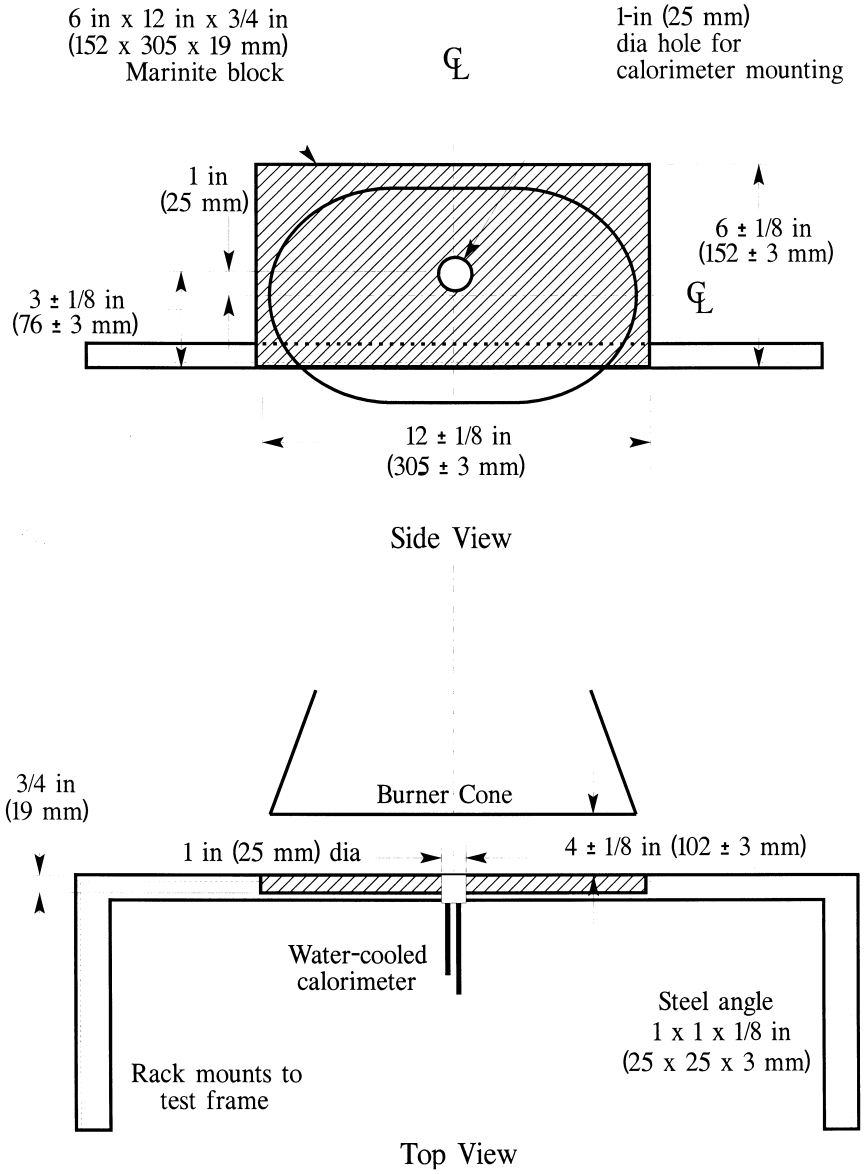

Figure 4 - Calorimeter Position Relative to Burner Cone

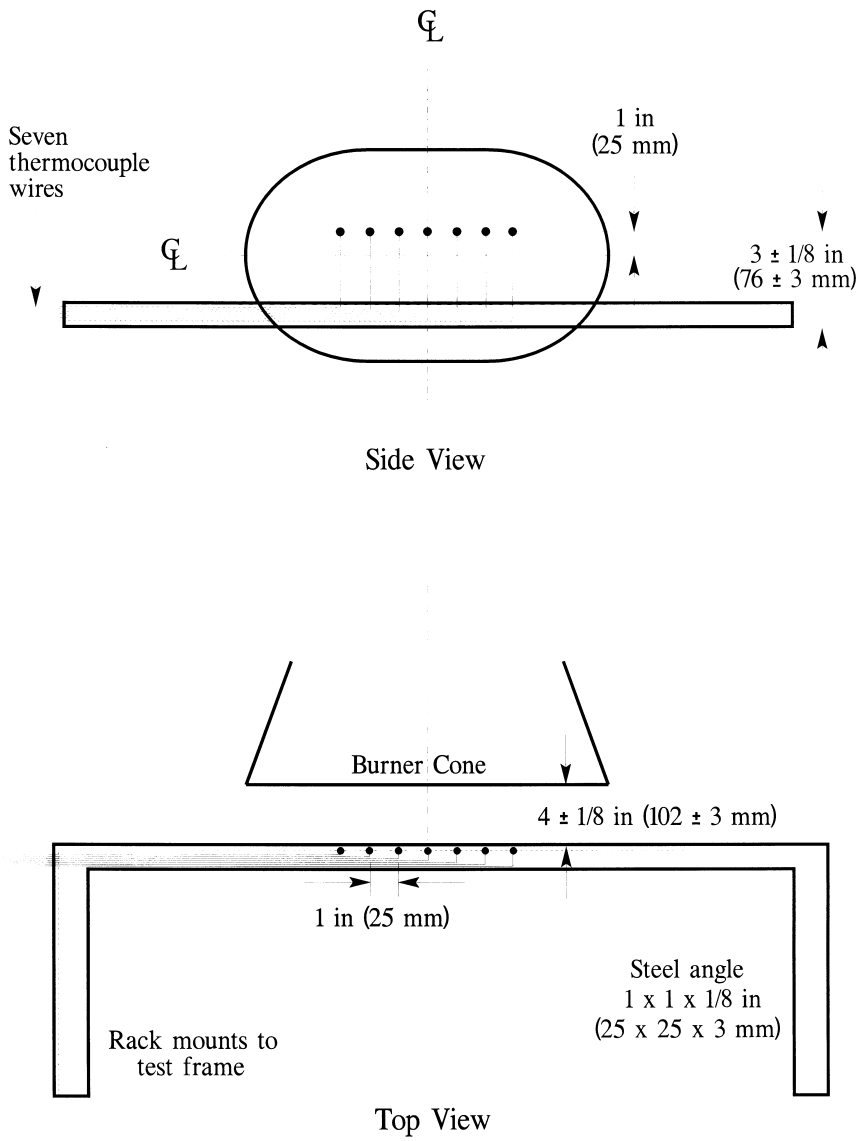

Figure 5 – Thermocouple Rake Position Relative to Burner Cone

(iv) *Thermocouples.* Provide seven ⅛-inch (3.2 mm) ceramic packed, metal sheathed, type K (Chromel-alumel), grounded junction thermocouples with a nominal 24 American Wire Gauge (AWG) size conductor for calibration. Attach the thermocouples to a steel angle bracket to form a thermocouple rake

for placement in the calibration rig during burner calibration (figure 5).

(v) *Air velocity meter*. Use a vane-type air velocity meter to calibrate the velocity of air entering the burner. An Omega Engineering Model HH30A is satisfactory. Use a suitable adapter to attach the measuring device to the inlet side of the burner to prevent air from entering the burner other than through the measuring device, which would produce erroneously low readings. Use a flexible duct, measuring 4 inches wide (102 mm) by 20 feet long (6.1 meters), to supply fresh air to the burner intake to prevent damage to the air velocity meter from ingested soot. An optional airbox permanently mounted to the burner intake area can effectively house the air velocity meter and provide a mounting port for the flexible intake duct.

(4) *Test specimen mounting frame*. Make the mounting frame for the test specimens of ⅛-inch (3.2 mm) thick steel as shown in figure 1, except for the center vertical former, which should be ¼-inch (6.4 mm) thick to minimize warpage. The specimen mounting frame stringers (horizontal) should be bolted to the test frame formers (vertical) such that the expansion of the stringers will not cause the entire structure to warp. Use the mounting frame for mounting the two insulation blanket test specimens as shown in figure 2.

(5) *Backface calorimeters*. Mount two total heat flux Gardon type calorimeters behind the insulation test specimens on the back side (cold) area of the test specimen mounting frame as shown in figure 6. Position the calorimeters along the same plane as the burner cone centerline, at a distance of 4 inches (102 mm) from the vertical centerline of the test frame.

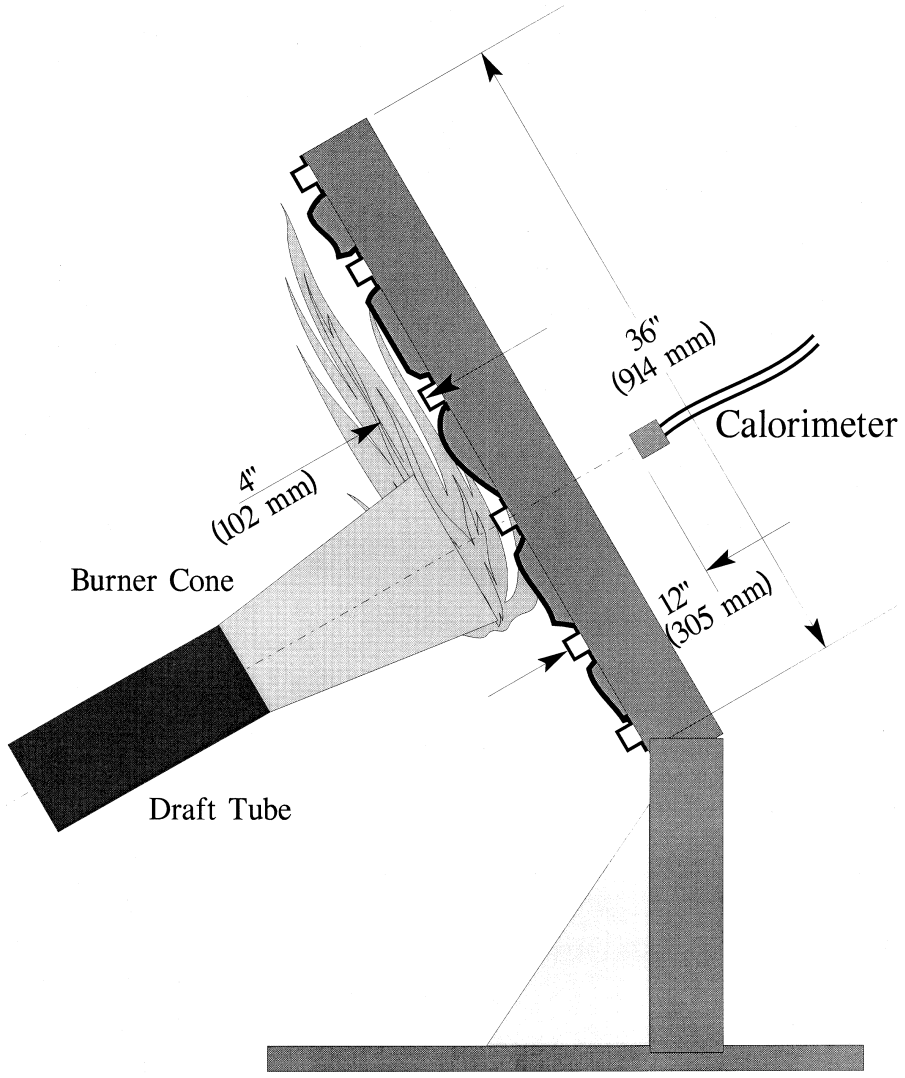

Figure 6 - . Position of Backface Calorimeters Relative to Test Specimen Frame

(i) The calorimeters must be a total heat flux, foil type Gardon Gage of an appropriate range such as 0–5 Btu/ft^2-sec (0–5.7 W/cm^2), accurate to ±3% of the indicated reading. The heat flux calibration method must comply with paragraph VI(b)(7) of this appendix.

(6) *Instrumentation*. Provide a recording potentiometer or other suitable calibrated instrument with an appropriate range to measure and record the outputs of the calorimeter and the thermocouples.

(7) *Timing device*. Provide a stopwatch or other device, accurate to ±1%, to measure the time of application of the burner flame and burnthrough time.

(8) *Test chamber*. Perform tests in a suitable chamber to reduce or eliminate the possibility of test fluctuation due to air movement. The chamber must have a minimum floor area of 10 by 10 feet (305 by 305 cm).

(i) *Ventilation hood*. Provide the test chamber with an exhaust system capable of removing the products of combustion expelled during tests.

(c) *Test Specimens*.

(1) *Specimen preparation*. Prepare a minimum of three specimen sets of the same construction and configuration for testing.

(2) *Insulation blanket test specimen*.

(i) For batt-type materials such as fiberglass, the constructed, finished blanket specimen assemblies must be 32 inches wide by 36 inches long (81.3 by 91.4 cm), exclusive of heat sealed film edges.

(ii) For rigid and other non-conforming types of insulation materials, the finished test specimens must fit into the test rig in such a manner as to replicate the actual in-service installation.

(3) *Construction*. Make each of the specimens tested using the principal components (*i.e.*, insulation, fire barrier material if used, and moisture barrier film) and assembly processes (representative seams and closures).

(i) *Fire barrier material*. If the insulation blanket is constructed with a fire barrier material, place the fire barrier material in a manner reflective of the installed arrangement For example, if the material will be placed on the outboard side of the insulation material, inside the moisture film, place it the same way in the test specimen.

(ii) *Insulation material*. Blankets that utilize more than one variety of insulation (composition, density, etc.) must have specimen sets constructed that reflect the insulation combination used. If, however, several blanket types use similar insulation combinations, it is not necessary to test each combination if it is possible to bracket the various combinations.

(iii) *Moisture barrier film*. If a production blanket construction utilizes more than one type of moisture barrier film, perform separate tests on each combination. For example, if a polyimide film is used in conjunction with an insulation in order to enhance the burnthrough capabilities, also test the same insulation when used with a polyvinyl fluoride film.

(iv) *Installation on test frame*. Attach the blanket test specimens to the test frame using 12 steel spring type clamps as shown in figure 7. Use the clamps to hold the blankets in place in both of the outer vertical formers, as well as the center vertical former (4 clamps per former). The clamp surfaces should measure 1 inch by 2 inches (25 by 51 mm). Place the top and bottom clamps 6 inches (15.2 cm) from the top and bottom of the test frame, respectively. Place the middle clamps 8 inches (20.3 cm) from the top and bottom clamps.

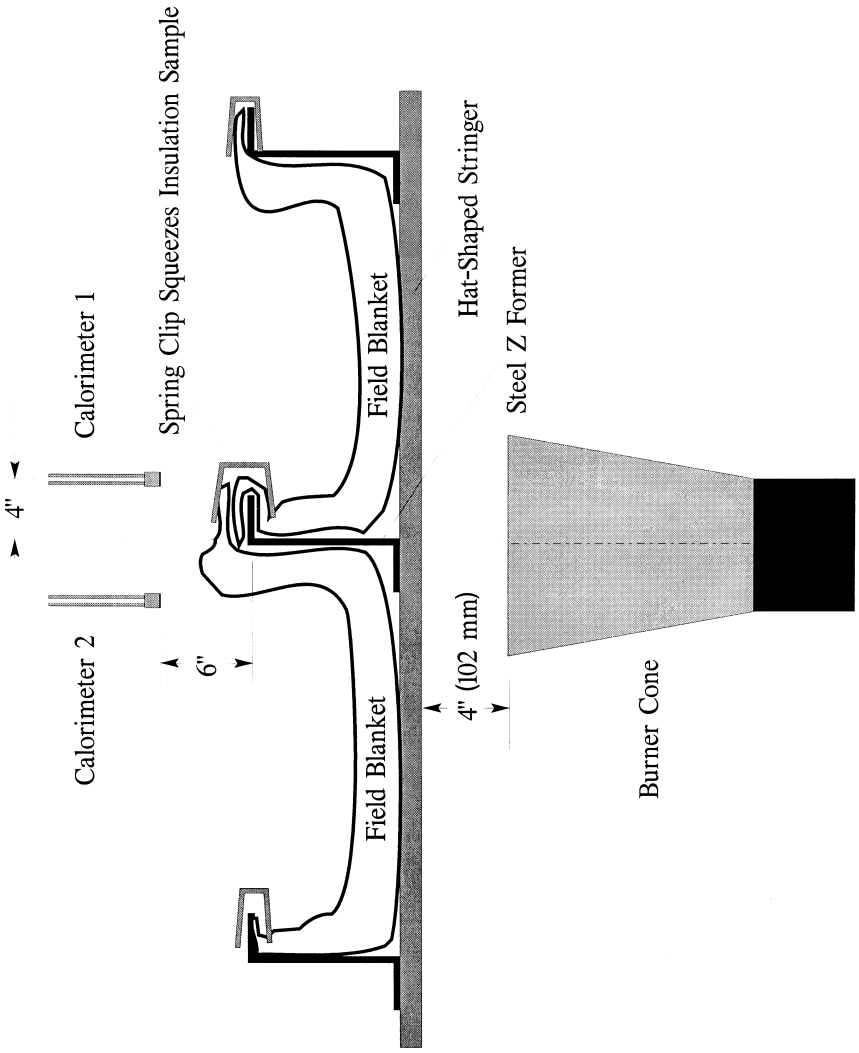

Figure 7 – Test Specimen Installation on Test Frame

(Note: For blanket materials that cannot be installed in accordance with figure 7 above, the blankets must be installed in a manner approved by the FAA.)

(v) *Conditioning.* Condition the specimens at 70° ±5 °F (21° ±2 °C) and 55% ±10% relative humidity for a minimum of 24 hours prior to testing.

(d) *Preparation of apparatus.*

(1) Level and center the frame assembly to ensure alignment of the calorimeter and/or thermocouple rake with the burner cone.

(2) Turn on the ventilation hood for the test chamber. Do not turn on the burner blower. Measure the airflow of the test chamber using a vane anemometer or equivalent measuring device. The vertical air velocity just behind the top of the upper insulation blanket test specimen must be 100 ±50 ft/min (0.51 ±0.25 m/s). The horizontal air velocity at this point must be less than 50 ft/min (0.25 m/s).

(3) If a calibrated flow meter is not available, measure the fuel flow rate using a graduated cylinder of appropriate size. Turn on the burner motor/fuel pump, after insuring that the igniter system is turned off. Collect the fuel via a plastic or rubber tube into the

graduated cylinder for a 2-minute period. Determine the flow rate in gallons per hour. The fuel flow rate must be 6.0 ±0.2 gallons per hour (0.378 ±0.0126 L/min).

(e) *Calibration.*

(1) Position the burner in front of the calorimeter so that it is centered and the vertical plane of the burner cone exit is 4 ±0.125 inches (102 ±3 mm) from the calorimeter face. Ensure that the horizontal centerline of the burner cone is offset 1 inch below the horizontal centerline of the calorimeter (figure 8). Without disturbing the calorimeter position, rotate the burner in front of the thermocouple rake, such that the middle thermocouple (number 4 of 7) is centered on the burner cone.

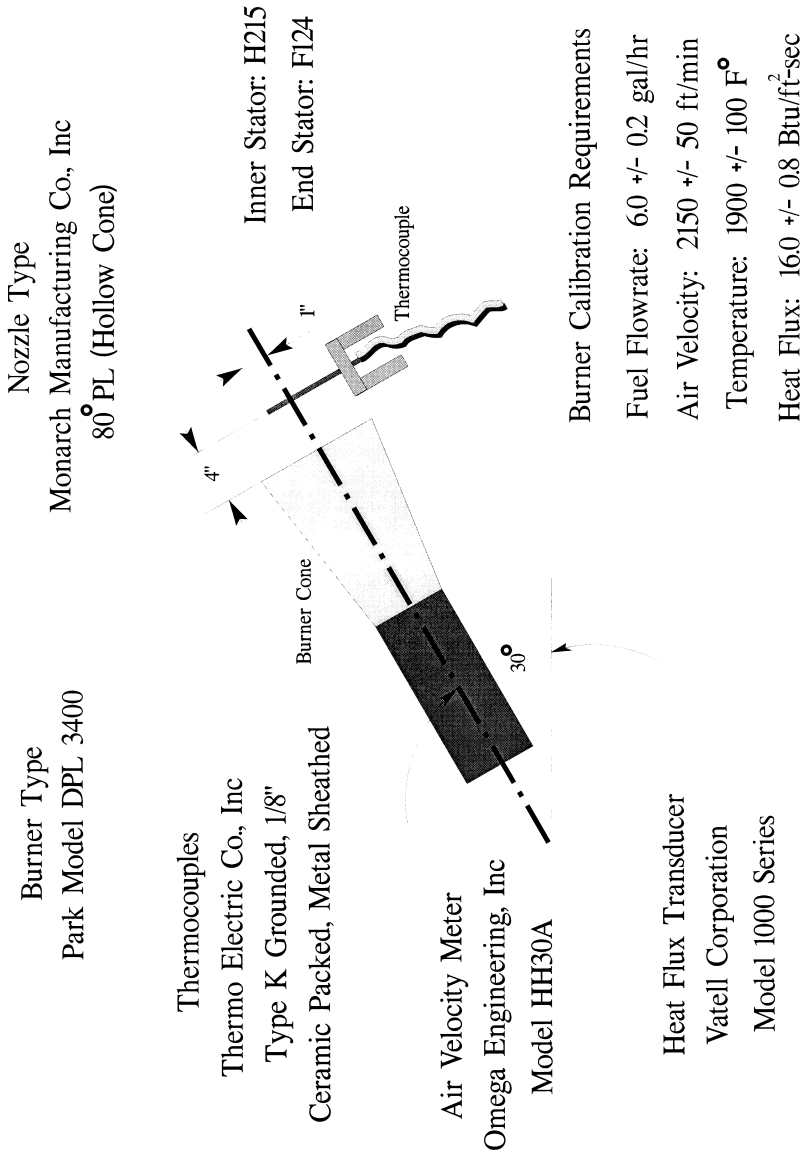

Figure 8 – Burner Information and Calibration Settings

Ensure that the horizontal centerline of the burner cone is also offset 1 inch below the horizontal centerline of the thermocouple tips. Re-check measurements by rotating the burner to each position to ensure proper alignment between the cone and the calorimeter and thermocouple rake. (Note: The test burner mounting system must incorporate ''detents'' that ensure proper centering of the burner cone with respect to both the calorimeter and the thermocouple rakes, so that rapid positioning of the burner can be achieved during the calibration procedure.)

(2) Position the air velocity meter in the adapter or airbox, making certain that no gaps exist where air could leak around the air velocity measuring device. Turn on the blower/motor while ensuring that the fuel solenoid and igniters are off. Adjust the air intake velocity to a level of 2150 ft/min, (10.92 m/s) then turn off the blower/motor. (Note: The Omega HH30 air velocity meter measures 2.625 inches in diameter. To calculate the intake airflow, multiply the cross-sectional area (0.03758 ft^2) by the air velocity (2150 ft/min) to obtain 80.80 ft^3/min. An air velocity meter other than the HH30 unit can be used, provided the calculated airflow of 80.80 ft^3/min (2.29 m^3/min) is equivalent.)

(3) Rotate the burner from the test position to the warm-up position. Prior to lighting the burner, ensure that the calorimeter face is clean of soot deposits, and there is water running through the calorimeter. Examine and clean the burner cone of any evidence of buildup of products of combustion, soot, etc. Soot buildup inside the burner cone may affect the flame characteristics and cause calibration difficulties. Since the burner cone may distort with time, dimensions should be checked periodically.

(4) While the burner is still rotated to the warm-up position, turn on the blower/motor, igniters and fuel flow, and light the burner. Allow it to warm up for a period of 2 minutes. Move the burner into the calibration position and allow 1 minute for calorimeter stabilization, then record the heat flux once every second for a period of 30 seconds. Turn off burner, rotate out of position, and allow to cool. Calculate the average heat flux over this 30-second duration. The average heat flux should be 16.0 ±0.8 Btu/ft^2 sec (18.2 ±0.9 W/cm^2).

(5) Position the burner in front of the thermocouple rake. After checking for proper alignment, rotate the burner to the warm-up position, turn on the blower/motor, igniters and fuel flow, and light the burner. Allow it to warm up for a period of 2 minutes. Move the burner into the calibration position and allow 1 minute for thermocouple stabilization, then record the temperature of each of the 7 thermocouples once every second for a period of 30 seconds. Turn off burner, rotate out of position, and allow to cool. Calculate the average temperature of each thermocouple over this 30-second period and record. The average temperature of each of the 7 thermocouples should be 1900°F ±100°F (1038 ±56 °C).

(6) If either the heat flux or the temperatures are not within the specified range, adjust the burner intake air velocity and repeat the procedures of paragraphs (4) and (5) above to obtain the proper values. Ensure that the inlet air velocity is within the range of 2150 ft/min ±50 ft/min (10.92 ±0.25 m/s).

(7) Calibrate prior to each test until consistency has been demonstrated. After consistency has been confirmed, several tests may be conducted with calibration conducted before and after a series of tests.

(f) *Test procedure.*

(1) Secure the two insulation blanket test specimens to the test frame. The insulation blankets should be attached to the test rig center vertical former using four spring clamps positioned as shown in figure 7 (according to the criteria of paragraph (c)(4) or (c)(4)(i) of this part of this appendix).

(2) Ensure that the vertical plane of the burner cone is at a distance of 4 ±0.125 inch (102 ±3 mm) from the outer surface of the horizontal stringers of the test specimen frame, and that the burner and test frame are both situated at a 30° angle with respect to vertical.

(3) When ready to begin the test, direct the burner away from the test position to the warm-up position so that the flame will not impinge on the specimens prematurely. Turn on and light the burner and allow it to stabilize for 2 minutes.

(4) To begin the test, rotate the burner into the test position and simultaneously start the timing device.

(5) Expose the test specimens to the burner flame for 4 minutes and then turn off the burner. Immediately rotate the burner out of the test position.

(6) Determine (where applicable) the burnthrough time, or the point at which the heat flux exceeds 2.0 Btu/ft^2-sec (2.27 W/cm^2).

(g) *Report.*

(1) Identify and describe the specimen being tested.

(2) Report the number of insulation blanket specimens tested.

(3) Report the burnthrough time (if any), and the maximum heat flux on the back face of the insulation blanket test specimen, and the time at which the maximum occurred.

(h) *Requirements.*

(1) Each of the two insulation blanket test specimens must not allow fire or flame penetration in less than 4 minutes.

(2) Each of the two insulation blanket test specimens must not allow more than 2.0 Btu/

ft^2-sec (2.27 W/cm^2) on the cold side of the insulation specimens at a point 12 inches (30.5 cm) from the face of the test rig.

[Amdt. 25–32, 37 FR 3972, Feb. 24, 1972]

EDITORIAL NOTE: For FEDERAL REGISTER citations affecting Appendix F to Part 25, see the List of CFR Sections Affected, which appears in the Finding Aids section of the printed volume and on GPO Access.

APPENDIX G TO PART 25—CONTINUOUS GUST DESIGN CRITERIA

The continuous gust design criteria in this appendix must be used in establishing the dynamic response of the airplane to vertical and lateral continuous turbulence unless a more rational criteria is used. The following gust load requirements apply to mission analysis and design envelope analysis:

(a) The limit gust loads utilizing the continuous turbulence concept must be determined in accordance with the provisions of either paragraph (b) or paragraphs (c) and (d) of this appendix.

(b) *Design envelope analysis.* The limit loads must be determined in accordance with the following:

(1) All critical altitudes, weights, and weight distributions, as specified in §25.321(b), and all critical speeds within the ranges indicated in paragraph (b)(3) of this appendix must be considered.

(2) Values of $\bar{A}$ (ratio of root-mean-square incremental load root-mean-square gust velocity) must be determined by dynamic analysis. The power spectral density of the atmospheric turbulence must be as given by the equation—

$$\phi(\Omega) = \sigma^2 L / \pi \quad \frac{1+\frac{8}{3}(1.339\,L\Omega)^2}{\left[1+(1.339\,L\Omega)^2\right]^{\frac{11}{6}}}$$

where:

φ=power-spectral density (ft./sec.)^2/rad./ft.
σ=root-mean-square gust velocity, ft./sec.
Ω=reduced frequency, radians per foot.
L=2,500 ft.

(3) The limit loads must be obtained by multiplying the $\bar{A}$ values determined by the dynamic analysis by the following values of the gust velocity $U\sigma$:

(i) At speed V_c: $U\sigma$=85 fps true gust velocity in the interval 0 to 30,000 ft. altitude and is linearly decreased to 30 fps true gust velocity at 80,000 ft. altitude. Where the Administrator finds that a design is comparable to a similar design with extensive satisfactory service experience, it will be acceptable to select $U\sigma$ at V_c less than 85 fps, but not less than 75 fps, with linear decrease from that value at 20,000 feet to 30 fps at 80,000 feet. The following factors will be taken into account when assessing comparability to a similar design:

(1) The transfer function of the new design should exhibit no unusual characteristics as compared to the similar design which will significantly affect response to turbulence; e.g., coalescence of modal response in the frequency regime which can result in a significant increase of loads.

(2) The typical mission of the new airplane is substantially equivalent to that of the similar design.

(3) The similar design should demonstrate the adequacy of the $U\sigma$ selected.

(ii) At speed V_B: $U\sigma$ is equal to 1.32 times the values obtained under paragraph (b)(3)(i) of this appendix.

(iii) At speed V_D: $U\sigma$ is equal to ½ the values obtained under paragraph (b)(3)(i) of this appendix.

(iv) At speeds between V_B and V_c and between V_c and V_D: $U\sigma$ is equal to a value obtained by linear interpolation.

(4) When a stability augmentation system is included in the analysis, the effect of system nonlinearities on loads at the limit load level must be realistically or conservatively accounted for.

(c) *Mission analysis.* Limit loads must be determined in accordance with the following:

(1) The expected utilization of the airplane must be represented by one or more flight profiles in which the load distribution and the variation with time of speed, altitude, gross weight, and center of gravity position are defined. These profiles must be divided into mission segments or blocks, for analysis, and average or effective values of the pertinent parameters defined for each segment.

(2) For each of the mission segments defined under paragraph (c)(1) of this appendix, values of $\bar{A}$ and N_o must be determined by analysis. $\bar{A}$ is defined as the ratio of root-mean-square incremental load to root-mean-square gust velocity and N_o is the radius of gyration of the load power spectral density function about zero frequency. The power spectral density of the atmospheric turbulence must be given by the equation set forth in paragraph (b)(2) of this appendix.

(3) For each of the load and stress quantities selected, the frequency of exceedance must be determined as a function of load level by means of the equation—

$$N_{(\gamma)} = \sum t N_o \left[P_1 \exp\left(-\frac{|y - y_{one-g}|}{b_1 \bar{A}} \right) + P_2 \exp\left(-\frac{|y - y_{one-g}|}{b_2 \bar{A}} \right) \right]$$

where—

t=selected time interval.

y=net value of the load or stress.

$Y_{one=g}$=value of the load or stress in one-g level flight.

N(y)=average number of exceedances of the indicated value of the load or stress in unit time.

Σ=symbol denoting summation over all mission segments.

N_o, $\bar{A}$=parameters determined by dynamic analysis as defined in paragraph (c)(2) of this appendix.

P_1, P_2, b_1, b_2=parameters defining the probability distributions of root-mean-square gust velocity, to be read from Figures 1 and 2 of this appendix.

The limit gust loads must be read from the frequency of exceedance curves at a frequency of exceedance of $2\times10-5$ exceedances per hour. Both positive and negative load directions must be considered in determining the limit loads.

(4) If a stability augmentation system is utilized to reduce the gust loads, consideration must be given to the fraction of flight time that the system may be inoperative. The flight profiles of paragraph (c)(1) of this appendix must include flight with the system inoperative for this fraction of the flight time. When a stability augmentation system is included in the analysis, the effect of system nonlinearities on loads at the limit load level must be conservatively accounted for.

(d) *Supplementary design envelope analysis.* In addition to the limit loads defined by paragraph (c) of this appendix, limit loads must also be determined in accordance with paragraph (b) of this appendix, except that—

(1) In paragraph (b)(3)(i) of this appendix, the value of Uσ=85 fps true gust velocity is replaced by Uσ=60 fps true gust velocity on the interval 0 to 30,000 ft. altitude, and is linearly decreased to 25 fps true gust velocity at 80,000 ft. altitude; and

(2) In paragraph (b) of this appendix, the reference to paragraphs (b)(3)(i) through (b)(3)(iii) of this appendix is to be understood as referring to the paragraph as modified by paragraph (d)(1).

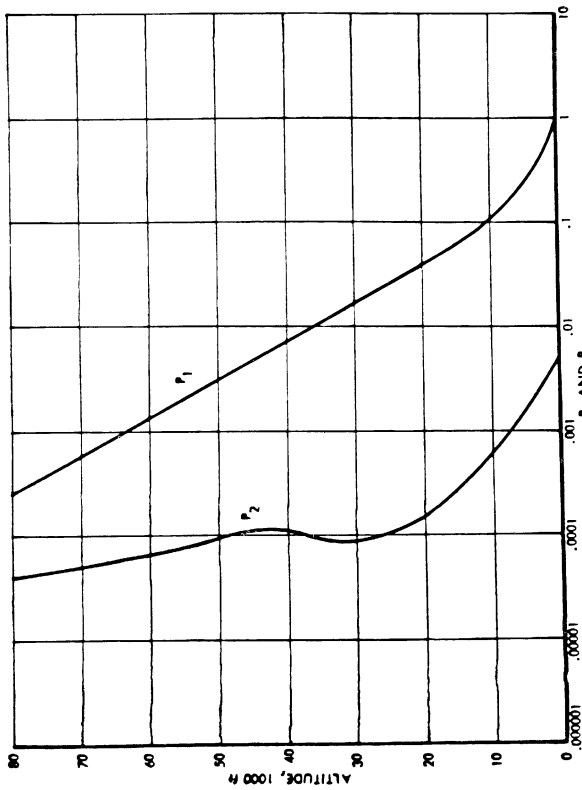

FIGURE 1 P_1 AND P_2 VALUES

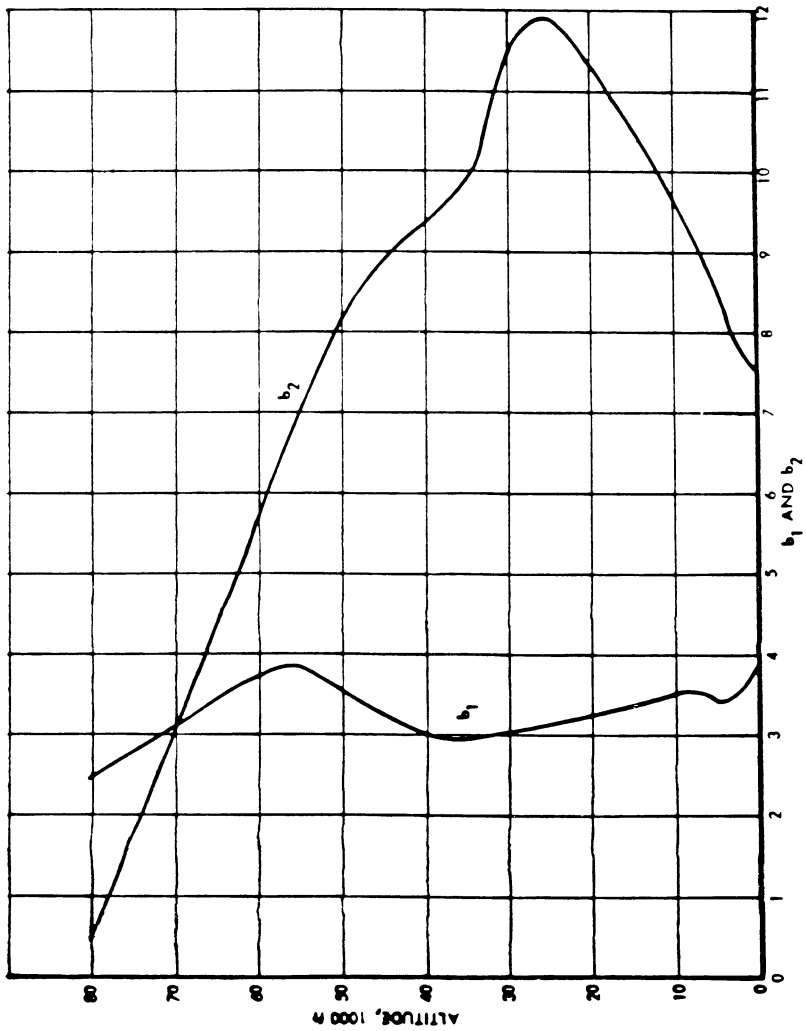

FIGURE 2 b_1 AND b_2 VALUES

[Amdt. 25–54, 45 FR 60173, Sept. 11, 1980]

APPENDIX H TO PART 25—INSTRUCTIONS FOR CONTINUED AIRWORTHINESS

H25.1 *General.*

(a) This appendix specifies requirements for preparation of Instructions for Continued Airworthiness as required by §§25.1529, 25.1729, and applicable provisions of parts 21 and 26 of this chapter.

(b) The Instructions for Continued Airworthiness for each airplane must include the Instructions for Continued Airworthiness for each engine and propeller (hereinafter designated ''products''), for each appliance required by this chapter, and any required information relating to the interface of those appliances and products with the airplane. If Instructions for Continued Airworthiness are not supplied by the manufacturer of an appliance or product installed in the airplane, the Instructions for Continued Airworthiness for the airplane must include

the information essential to the continued airworthiness of the airplane.

(c) The applicant must submit to the FAA a program to show how changes to the Instructions for Continued Airworthiness made by the applicant or by the manufacturers or products and appliances installed in the airplane will be distributed.

H25.2 *Format.*

(a) The Instructions for Continued Airworthiness must be in the form of a manual or manuals as appropriate for the quantity of data to be provided.

(b) The format of the manual or manuals must provide for a practical arrangement.

H25.3 *Content.*

The contents of the manual or manuals must be prepared in the English language. The Instructions for Continued Airworthiness must contain the following manuals or sections, as appropriate, and information:

(a) *Airplane maintenance manual or section.* (1) Introduction information that includes an explanation of the airplane's features and data to the extent necessary for maintenance or preventive maintenance.

(2) A description of the airplane and its systems and installations including its engines, propellers, and appliances.

(3) Basic control and operation information describing how the airplane components and systems are controlled and how they operate, including any special procedures and limitations that apply.

(4) Servicing information that covers details regarding servicing points, capacities of tanks, reservoirs, types of fluids to be used, pressures applicable to the various systems, location of access panels for inspection and servicing, locations of lubrication points, lubricants to be used, equipment required for servicing, tow instructions and limitations, mooring, jacking, and leveling information.

(b) *Maintenance instructions.* (1) Scheduling information for each part of the airplane and its engines, auxiliary power units, propellers, accessories, instruments, and equipment that provides the recommended periods at which they should be cleaned, inspected, adjusted, tested, and lubricated, and the degree of inspection, the applicable wear tolerances, and work recommended at these periods. However, the applicant may refer to an accessory, instrument, or equipment manufacturer as the source of this information if the applicant shows that the item has an exceptionally high degree of complexity requiring specialized maintenance techniques, test equipment, or expertise. The recommended overhaul periods and necessary cross references to the Airworthiness Limitations section of the manual must also be included. In addition, the applicant must include an inspection program that includes the frequency and extent of the inspections necessary to provide for the continued airworthiness of the airplane.

(2) Troubleshooting information describing probable malfunctions, how to recognize those malfunctions, and the remedial action for those malfunctions.

(3) Information describing the order and method of removing and replacing products and parts with any necessary precautions to be taken.

(4) Other general procedural instructions including procedures for system testing during ground running, symmetry checks, weighing and determining the center of gravity, lifting and shoring, and storage limitations.

(c) Diagrams of structural access plates and information needed to gain access for inspections when access plates are not provided.

(d) Details for the application of special inspection techniques including radiographic and ultrasonic testing where such processes are specified.

(e) Information needed to apply protective treatments to the structure after inspection.

(f) All data relative to structural fasteners such as identification, discard recommendations, and torque values.

(g) A list of special tools needed.

H25.4 *Airworthiness Limitations section.*

(a) The Instructions for Continued Airworthiness must contain a section titled Airworthiness Limitations that is segregated and clearly distinguishable from the rest of the document. This section must set forth—

(1) Each mandatory replacement time, structural inspection interval, and related structural inspection procedures approved under §25.571.

(2) Each mandatory replacement time, inspection interval, related inspection procedure, and all critical design configuration control limitations approved under §25.981 for the fuel tank system.

(3) Any mandatory replacement time of EWIS components as defined in section 25.1701.

(b) If the Instructions for Continued Airworthiness consist of multiple documents, the section required by this paragraph must be included in the principal manual. This section must contain a legible statement in a prominent location that reads: ''The Airworthiness Limitations section is FAA-approved and specifies maintenance required under §§43.16 and 91.403 of the Federal Aviation Regulations, unless an alternative program has been FAA approved.''

H25.5 *Electrical Wiring Interconnection System (EWIS) Instructions for Continued Airworthiness.*

(a) The applicant must prepare Instructions for Continued Airworthiness (ICA) applicable to EWIS as defined by §25.1701 that

are approved by the FAA and include the following:

(1) Maintenance and inspection requirements for the EWIS developed with the use of an enhanced zonal analysis procedure that includes:

(i) Identification of each zone of the airplane.

(ii) Identification of each zone that contains EWIS.

(iii) Identification of each zone containing EWIS that also contains combustible materials.

(iv) Identification of each zone in which EWIS is in close proximity to both primary and back-up hydraulic, mechanical, or electrical flight controls and lines.

(v) Identification of—

(A) Tasks, and the intervals for performing those tasks, that will reduce the likelihood of ignition sources and accumulation of combustible material, and

(B) Procedures, and the intervals for performing those procedures, that will effectively clean the EWIS components of combustible material if there is not an effective task to reduce the likelihood of combustible material accumulation.

(vi) Instructions for protections and caution information that will minimize contamination and accidental damage to EWIS, as applicable, during performance of maintenance, alteration, or repairs.

(2) Acceptable EWIS maintenance practices in a standard format.

(3) Wire separation requirements as determined under §25.1707.

(4) Information explaining the EWIS identification method and requirements for identifying any changes to EWIS under §25.1711.

(5) Electrical load data and instructions for updating that data.

(b) The EWIS ICA developed in accordance with the requirements of H25.5(a)(1) must be in the form of a document appropriate for the information to be provided, and they must be easily recognizable as EWIS ICA. This document must either contain the required EWIS ICA or specifically reference other portions of the ICA that contain this information.

[Amdt. 25–54, 45 FR 60177, Sept. 11, 1980, as amended by Amdt. 25–68, 54 FR 34329, Aug. 18, 1989; Amdt. 25–102, 66 FR 23130, May 7, 2001; Amdt. 25–123, 72 FR 63408, Nov. 8, 2007]

APPENDIX I TO PART 25—INSTALLATION OF AN AUTOMATIC TAKEOFF THRUST CONTROL SYSTEM (ATTCS)

I25.1 *General.*

(a) This appendix specifies additional requirements for installation of an engine power control system that automatically resets thrust or power on operating engine(s) in the event of any one engine failure during takeoff.

(b) With the ATTCS and associated systems functioning normally as designed, all applicable requirements of Part 25, except as provided in this appendix, must be met without requiring any action by the crew to increase thrust or power.

I25.2 *Definitions.*

(a) *Automatic Takeoff Thrust Control System (ATTCS).* An ATTCS is defined as the entire automatic system used on takeoff, including all devices, both mechanical and electrical, that sense engine failure, transmit signals, actuate fuel controls or power levers or increase engine power by other means on operating engines to achieve scheduled thrust or power increases, and furnish cockpit information on system operation.

(b) *Critical Time Interval.* When conducting an ATTCS takeoff, the critical time interval is between V_1 minus 1 second and a point on the minimum performance, all-engine flight path where, assuming a simultaneous occurrence of an engine and ATTCS failure, the resulting minimum flight path thereafter intersects the Part 25 required actual flight path at no less than 400 feet above the takeoff surface. This time interval is shown in the following illustration:

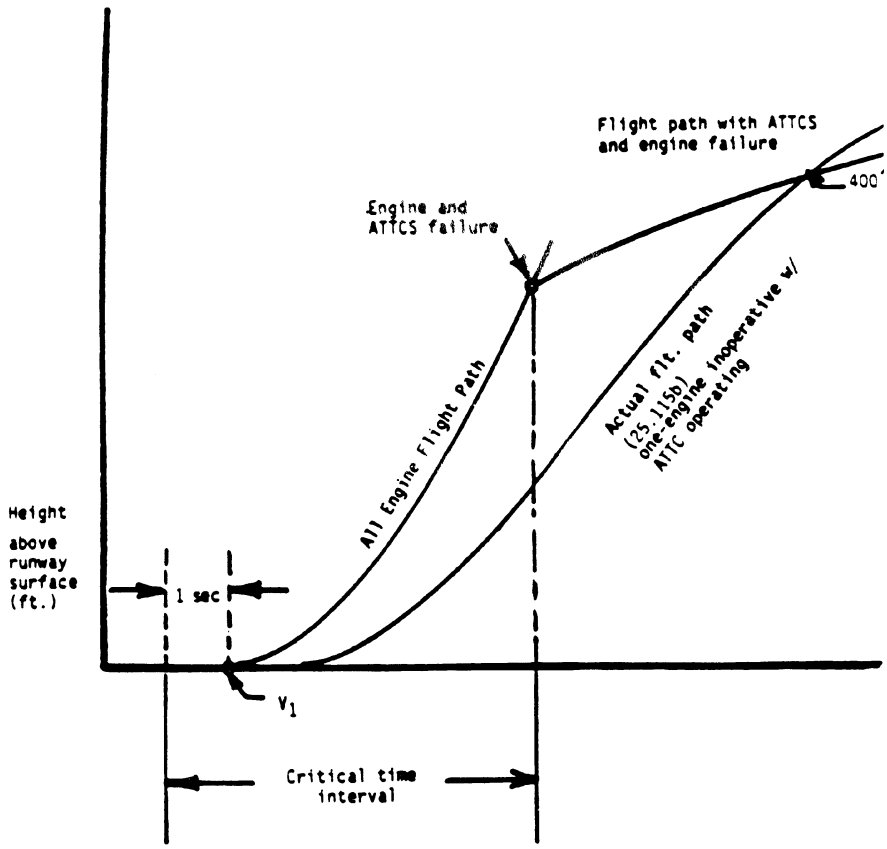

I25.3 *Performance and System Reliability Requirements.*

The applicant must comply with the performance and ATTCS reliability requirements as follows:

(a) An ATTCS failure or a combination of failures in the ATTCS during the critical time interval:

(1) Shall not prevent the insertion of the *maximum approved takeoff* thrust or power, or must be shown to be an improbable event.

(2) Shall not result in a significant loss or reduction in thrust or power, or must be shown to be an extremely improbable event.

(b) The concurrent existence of an ATTCS failure and an engine failure during the critical time interval must be shown to be extremely improbable.

(c) All applicable performance requirements of Part 25 must be met with an engine failure occurring at the most critical point during takeoff with the ATTCS system functioning.

I25.4 *Thrust Setting.*

The initial takeoff thrust or power setting on each engine at the beginning of the takeoff roll may not be less than any of the following:

(a) Ninety (90) percent of the thrust or power set by the ATTCS (the maximum takeoff thrust or power approved for the airplane under existing ambient conditions);

(b) That required to permit normal operation of all safety-related systems and equipment dependent upon engine thrust or power lever position; or

(c) That shown to be free of hazardous engine response characteristics when thrust or power is advanced from the initial takeoff thrust or power to the maximum approved takeoff thrust or power.

I25.5 *Powerplant Controls.*

(a) In addition to the requirements of §25.1141, no single failure or malfunction, or probable combination thereof, of the ATTCS, including associated systems, may cause the failure of any powerplant function necessary for safety.

(b) The ATTCS must be designed to:

(1) Apply thrust or power on the operating engine(s), following any one engine failure during takeoff, to achieve the maximum approved takeoff thrust or power without exceeding engine operating limits;

(2) Permit manual decrease or increase in thrust or power up to the maximum takeoff thrust or power approved for the airplane under existing conditions through the use of the power lever. For airplanes equipped with limiters that automatically prevent engine operating limits from being exceeded under existing ambient conditions, other means may be used to increase the thrust or power in the event of an ATTCS failure provided the means is located on or forward of the power levers; is easily identified and operated under all operating conditions by a single action of either pilot with the hand that is normally used to actuate the power levers; and meets the requirements of §25.777 (a), (b), and (c);

(3) Provide a means to verify to the flightcrew before takeoff that the ATTCS is in a condition to operate; and

(4) Provide a means for the flightcrew to deactivate the automatic function. This means must be designed to prevent inadvertent deactivation.

I25.6 *Powerplant Instruments.*

In addition to the requirements of §25.1305:

(a) A means must be provided to indicate when the ATTCS is in the armed or ready condition; and

(b) If the inherent flight characteristics of the airplane do not provide adequate warning that an engine has failed, a warning system that is independent of the ATTCS must be provided to give the pilot a clear warning of any engine failure during takeoff.

[Amdt. 25–62, 52 FR 43156, Nov. 9, 1987]

APPENDIX J TO PART 25—EMERGENCY EVACUATION

The following test criteria and procedures must be used for showing compliance with §25.803:

(a) The emergency evacuation must be conducted with exterior ambient light levels of no greater than 0.3 foot-candles prior to the activation of the airplane emergency lighting system. The source(s) of the initial exterior ambient light level may remain active or illuminated during the actual demonstration. There must, however, be no increase in the exterior ambient light level except for that due to activation of the airplane emergency lighting system.

(b) The airplane must be in a normal attitude with landing gear extended.

(c) Unless the airplane is equipped with an off-wing descent means, stands or ramps may be used for descent from the wing to the ground. Safety equipment such as mats or inverted life rafts may be placed on the floor or ground to protect participants. No other equipment that is not part of the emergency evacuation equipment of the airplane may be used to aid the participants in reaching the ground.

(d) Except as provided in paragraph (a) of this appendix, only the airplane's emergency lighting system may provide illumination.

(e) All emergency equipment required for the planned operation of the airplane must be installed.

(f) Each internal door or curtain must be in the takeoff configuration.

(g) Each crewmember must be seated in the normally assigned seat for takeoff and must remain in the seat until receiving the signal for commencement of the demonstration. Each crewmember must be a person having knowledge of the operation of exits and emergency equipment and, if compliance with §121.291 is also being demonstrated, each flight attendant must be a member of a regularly scheduled line crew.

(h) A representative passenger load of persons in normal health must be used as follows:

(1) At least 40 percent of the passenger load must be female.

(2) At least 35 percent of the passenger load must be over 50 years of age.

(3) At least 15 percent of the passenger load must be female and over 50 years of age.

(4) Three life-size dolls, not included as part of the total passenger load, must be carried by passengers to simulate live infants 2 years old or younger.

(5) Crewmembers, mechanics, and training personnel, who maintain or operate the airplane in the normal course of their duties, may not be used as passengers.

(i) No passenger may be assigned a specific seat except as the Administrator may require. Except as required by subparagraph (g) of this paragraph, no employee of the applicant may be seated next to an emergency exit.

(j) Seat belts and shoulder harnesses (as required) must be fastened.

(k) Before the start of the demonstration, approximately one-half of the total average amount of carry-on baggage, blankets, pillows, and other similar articles must be distributed at several locations in aisles and emergency exit access ways to create minor obstructions.

(l) No prior indication may be given to any crewmember or passenger of the particular exits to be used in the demonstration.

(m) The applicant may not practice, rehearse, or describe the demonstration for the

participants nor may any participant have taken part in this type of demonstration within the preceding 6 months.

(n) Prior to entering the demonstration aircraft, the passengers may also be advised to follow directions of crewmembers but may not be instructed on the procedures to be followed in the demonstration, except with respect to safety procedures in place for the demonstration or which have to do with the demonstration site. Prior to the start of the demonstration, the pre-takeoff passenger briefing required by §121.571 may be given. Flight attendants may assign demonstration subjects to assist persons from the bottom of a slide, consistent with their approved training program.

(o) The airplane must be configured to prevent disclosure of the active emergency exits to demonstration participants in the airplane until the start of the demonstration.

(p) Exits used in the demonstration must consist of one exit from each exit pair. The demonstration may be conducted with the escape slides, if provided, inflated and the exits open at the beginning of the demonstration. In this case, all exits must be configured such that the active exits are not disclosed to the occupants. If this method is used, the exit preparation time for each exit utilized must be accounted for, and exits that are not to be used in the demonstration must not be indicated before the demonstration has started. The exits to be used must be representative of all of the emergency exits on the airplane and must be designated by the applicant, subject to approval by the Administrator. At least one floor level exit must be used.

(q) Except as provided in paragraph (c) of this section, all evacuees must leave the airplane by a means provided as part of the airplane's equipment.

(r) The applicant's approved procedures must be fully utilized, except the flightcrew must take no active role in assisting others inside the cabin during the demonstration.

(s) The evacuation time period is completed when the last occupant has evacuated the airplane and is on the ground. Provided that the acceptance rate of the stand or ramp is no greater than the acceptance rate of the means available on the airplane for descent from the wing during an actual crash situation, evacuees using stands or ramps allowed by paragraph (c) of this appendix are considered to be on the ground when they are on the stand or ramp.

[Amdt. 25–72, 55 FR 29788, July 20, 1990, as amended by Amdt. 25–79, Aug. 26, 1993; Amdt. 25–117, 69 FR 67499, Nov. 17, 2004]

APPENDIX K TO PART 25—EXTENDED OPERATIONS (ETOPS)

This appendix specifies airworthiness requirements for the approval of an airplane-engine combination for extended operations (ETOPS). For two-engine airplanes, the applicant must comply with sections K25.1 and K25.2 of this appendix. For airplanes with more than two engines, the applicant must comply with sections K25.1 and K25.3 of this appendix.

K25.1 *Design requirements.*

K25.1.1 *Part 25 compliance.*

The airplane-engine combination must comply with the requirements of part 25 considering the maximum flight time and the longest diversion time for which the applicant seeks approval.

K25.1.2 *Human factors.*

An applicant must consider crew workload, operational implications, and the crew's and passengers' physiological needs during continued operation with failure effects for the longest diversion time for which it seeks approval.

K25.1.3 *Airplane systems.*

(a) *Operation in icing conditions.*

(1) The airplane must be certificated for operation in icing conditions in accordance with §25.1419.

(2) The airplane must be able to safely conduct an ETOPS diversion with the most critical ice accretion resulting from:

(i) Icing conditions encountered at an altitude that the airplane would have to fly following an engine failure or cabin decompression.

(ii) A 15-minute hold in the continuous maximum icing conditions specified in Appendix C of this part with a liquid water content factor of 1.0.

(iii) Ice accumulated during approach and landing in the icing conditions specified in Appendix C of this part.

(b) *Electrical power supply.* The airplane must be equipped with at least three independent sources of electrical power.

(c) *Time limited systems.* The applicant must define the system time capability of each ETOPS significant system that is time-limited.

K25.1.4 *Propulsion systems.*

(a) *Fuel system design.* Fuel necessary to complete an ETOPS flight (including a diversion for the longest time for which the applicant seeks approval) must be available to the operating engines at the pressure and fuel-flow required by §25.955 under any airplane failure condition not shown to be extremely improbable. Types of failures that must be considered include, but are not limited to: crossfeed valve failures, automatic fuel management system failures, and normal electrical power generation failures.

(1) If the engine has been certified for limited operation with negative engine-fuel-

pump-inlet pressures, the following requirements apply:

(i) Airplane demonstration-testing must cover worst case cruise and diversion conditions involving:

(A) Fuel grade and temperature.

(B) Thrust or power variations.

(C) Turbulence and negative G.

(D) Fuel system components degraded within their approved maintenance limits.

(ii) Unusable-fuel quantity in the suction feed configuration must be determined in accordance with §25.959.

(2) For two-engine airplanes to be certificated for ETOPS beyond 180 minutes, one fuel boost pump in each main tank and at least one crossfeed valve, or other means for transferring fuel, must be powered by an independent electrical power source other than the three power sources required to comply with section K25.1.3(b) of this appendix. This requirement does not apply if the normal fuel boost pressure, crossfeed valve actuation, or fuel transfer capability is not provided by electrical power.

(3) An alert must be displayed to the flightcrew when the quantity of fuel available to the engines falls below the level required to fly to the destination. The alert must be given when there is enough fuel remaining to safely complete a diversion. This alert must account for abnormal fuel management or transfer between tanks, and possible loss of fuel. This paragraph does not apply to airplanes with a required flight engineer.

(b) *APU design*. If an APU is needed to comply with this appendix, the applicant must demonstrate that:

(1) The reliability of the APU is adequate to meet those requirements; and

(2) If it is necessary that the APU be able to start in flight, it is able to start at any altitude up to the maximum operating altitude of the airplane, or 45,000 feet, whichever is lower, and run for the remainder of any flight .

(c) *Engine oil tank design*. The engine oil tank filler cap must comply with §33.71(c)(4) of this chapter.

K25.1.5 *Engine-condition monitoring*.

Procedures for engine-condition monitoring must be specified and validated in accordance with Part 33, Appendix A, paragraph A33.3(c) of this chapter.

K25.1.6 *Configuration, maintenance, and procedures*.

The applicant must list any configuration, operating and maintenance requirements, hardware life limits, MMEL constraints, and ETOPS approval in a CMP document.

K25.1.7 *Airplane flight manual*.

The airplane flight manual must contain the following information applicable to the ETOPS type design approval:

(a) Special limitations, including any limitation associated with operation of the airplane up to the maximum diversion time being approved.

(b) Required markings or placards.

(c) The airborne equipment required for extended operations and flightcrew operating procedures for this equipment.

(d) The system time capability for the following:

(1) The most limiting fire suppression system for Class C cargo or baggage compartments.

(2) The most limiting ETOPS significant system other than fire suppression systems for Class C cargo or baggage compartments.

(e) This statement: ''The type-design reliability and performance of this airplane-engine combination has been evaluated under 14 CFR 25.1535 and found suitable for (identify maximum approved diversion time) extended operations (ETOPS) when the configuration, maintenance, and procedures standard contained in (identify the CMP document) are met. The actual maximum approved diversion time for this airplane may be less based on its most limiting system time capability. This finding does not constitute operational approval to conduct ETOPS.''

K25.2. *Two-engine airplanes*.

An applicant for ETOPS type design approval of a two-engine airplane must use one of the methods described in section K25.2.1, K25.2.2, or K25.2.3 of this appendix.

K25.2.1 *Service experience method*.

An applicant for ETOPS type design approval using the service experience method must comply with sections K25.2.1(a) and K25.2.1(b) of this appendix before conducting the assessments specified in sections K25.2.1(c) and K25.2.1(d) of this appendix, and the flight test specified in section K25.2.1(e) of this appendix.

(a) *Service experience*. The world fleet for the airplane-engine combination must accumulate a minimum of 250,000 engine-hours. The FAA may reduce this number of hours if the applicant identifies compensating factors that are acceptable to the FAA. The compensating factors may include experience on another airplane, but experience on the candidate airplane must make up a significant portion of the total service experience.

(b) *In-flight shutdown (IFSD) rates*. The demonstrated 12-month rolling average IFSD rate for the world fleet of the airplane-engine combination must be commensurate with the level of ETOPS approval being sought.

(1) For type design approval up to and including 120 minutes: An IFSD rate of 0.05 or less per 1,000 world-fleet engine-hours, unless otherwise approved by the FAA. Unless the IFSD rate is 0.02 or less per 1,000 world-fleet engine-hours, the applicant must provide a

list of corrective actions in the CMP document specified in section K25.1.6 of this appendix, that, when taken, would result in an IFSD rate of 0.02 or less per 1,000 fleet engine-hours.

(2) For type design approval up to and including 180 minutes: An IFSD rate of 0.02 or less per 1,000 world-fleet engine-hours, unless otherwise approved by the FAA. If the airplane-engine combination does not meet this rate by compliance with an existing 120-minute CMP document, then new or additional CMP requirements that the applicant has demonstrated would achieve this IFSD rate must be added to the CMP document.

(3) For type design approval beyond 180 minutes: An IFSD rate of 0.01 or less per 1,000 fleet engine-hours unless otherwise approved by the FAA. If the airplane-engine combination does not meet this rate by compliance with an existing 120-minute or 180-minute CMP document, then new or additional CMP requirements that the applicant has demonstrated would achieve this IFSD rate must be added to the CMP document.

(c) *Propulsion system assessment.* (1) The applicant must conduct a propulsion system assessment based on the following data collected from the world-fleet of the airplane-engine combination:

(i) A list of all IFSD's, unplanned ground engine shutdowns, and occurrences (both ground and in-flight) when an engine was not shut down, but engine control or the desired thrust or power level was not achieved, including engine flameouts. Planned IFSD's performed during flight training need not be included. For each item, the applicant must provide—

(A) Each airplane and engine make, model, and serial number;

(B) Engine configuration, and major alteration history;

(C) Engine position;

(D) Circumstances leading up to the engine shutdown or occurrence;

(E) Phase of flight or ground operation;

(F) Weather and other environmental conditions; and

(G) Cause of engine shutdown or occurrence.

(ii) A history of unscheduled engine removal rates since introduction into service (using 6- and 12-month rolling averages), with a summary of the major causes for the removals.

(iii) A list of all propulsion system events (whether or not caused by maintenance or flightcrew error), including dispatch delays, cancellations, aborted takeoffs, turnbacks, diversions, and flights that continue to destination after the event.

(iv) The total number of engine hours and cycles, the number of hours for the engine with the highest number of hours, the number of cycles for the engine with the highest number of cycles, and the distribution of hours and cycles.

(v) The mean time between failures (MTBF) of propulsion system components that affect reliability.

(vi) A history of the IFSD rates since introduction into service using a 12-month rolling average.

(2) The cause or potential cause of each item listed in K25.2.1(c)(1)(i) must have a corrective action or actions that are shown to be effective in preventing future occurrences. Each corrective action must be identified in the CMP document specified in section K25.1.6. A corrective action is not required:

(i) For an item where the manufacturer is unable to determine a cause or potential cause.

(ii) For an event where it is technically unfeasible to develop a corrective action.

(iii) If the world-fleet IFSD rate—

(A) Is at or below 0.02 per 1,000 world-fleet engine-hours for approval up to and including 180-minute ETOPS; or

(B) Is at or below 0.01 per 1,000 world-fleet engine-hours for approval greater than 180-minute ETOPS.

(d) *Airplane systems assessment.* The applicant must conduct an airplane systems assessment. The applicant must show that the airplane systems comply with §25.1309(b) using available in-service reliability data for ETOPS significant systems on the candidate airplane-engine combination. Each cause or potential cause of a relevant design, manufacturing, operational, and maintenance problem occurring in service must have a corrective action or actions that are shown to be effective in preventing future occurrences. Each corrective action must be identified in the CMP document specified in section K25.1.6 of this appendix. A corrective action is not required if the problem would not significantly impact the safety or reliability of the airplane system involved. A relevant problem is a problem with an ETOPS group 1 significant system that has or could result in, an IFSD or diversion. The applicant must include in this assessment relevant problems with similar or identical equipment installed on other types of airplanes to the extent such information is reasonably available.

(e) *Airplane flight test.* The applicant must conduct a flight test to validate the flightcrew's ability to safely conduct an ETOPS diversion with an inoperative engine and worst-case ETOPS Significant System failures and malfunctions that could occur in service. The flight test must validate the airplane's flying qualities and performance with the demonstrated failures and malfunctions.

K25.2.2 *Early ETOPS method.*

An applicant for ETOPS type design approval using the Early ETOPS method must comply with the following requirements:

(a) *Assessment of relevant experience with airplanes previously certificated under part 25.* The applicant must identify specific corrective actions taken on the candidate airplane to prevent relevant design, manufacturing, operational, and maintenance problems experienced on airplanes previously certificated under part 25 manufactured by the applicant. Specific corrective actions are not required if the nature of a problem is such that the problem would not significantly impact the safety or reliability of the airplane system involved. A relevant problem is a problem with an ETOPS group 1 significant system that has or could result in an IFSD or diversion. The applicant must include in this assessment relevant problems of supplier-provided ETOPS group 1 significant systems and similar or identical equipment used on airplanes built by other manufacturers to the extent such information is reasonably available.

(b) *Propulsion system design.* (1) The engine used in the applicant's airplane design must be approved as eligible for Early ETOPS in accordance with § 33.201 of this chapter.

(2) The applicant must design the propulsion system to preclude failures or malfunctions that could result in an IFSD. The applicant must show compliance with this requirement by analysis, test, in-service experience on other airplanes, or other means acceptable to the FAA. If analysis is used, the applicant must show that the propulsion system design will minimize failures and malfunctions with the objective of achieving the following IFSD rates:

(i) An IFSD rate of 0.02 or less per 1,000 world-fleet engine-hours for type design approval up to and including 180 minutes.

(ii) An IFSD rate of 0.01 or less per 1,000 world-fleet engine-hours for type design approval beyond 180 minutes.

(c) *Maintenance and operational procedures.* The applicant must validate all maintenance and operational procedures for ETOPS significant systems. The applicant must identify, track, and resolve any problems found during the validation in accordance with the problem tracking and resolution system specified in section K25.2.2(h) of this appendix.

(d) *Propulsion system validation test.* (1) The installed engine configuration for which approval is being sought must comply with § 33.201(c) of this chapter. The test engine must be configured with a complete airplane nacelle package, including engine-mounted equipment, except for any configuration differences necessary to accommodate test stand interfaces with the engine nacelle package. At the conclusion of the test, the propulsion system must be—

(i) Visually inspected according to the applicant's on-wing inspection recommendations and limits; and

(ii) Completely disassembled and the propulsion system hardware inspected to determine whether it meets the service limits specified in the Instructions for Continued Airworthiness submitted in compliance with § 25.1529.

(2) The applicant must identify, track, and resolve each cause or potential cause of IFSD, loss of thrust control, or other power loss encountered during this inspection in accordance with the problem tracking and resolution system specified in section K25.2.2 (h) of this appendix.

(e) *New technology testing.* Technology new to the applicant, including substantially new manufacturing techniques, must be tested to substantiate its suitability for the airplane design.

(f) *APU validation test.* If an APU is needed to comply with this appendix, one APU of the type to be certified with the airplane must be tested for 3,000 equivalent airplane operational cycles. Following completion of the test, the APU must be disassembled and inspected. The applicant must identify, track, and resolve each cause or potential cause of an inability to start or operate the APU in flight as intended in accordance with the problem tracking and resolution system specified in section K25.2.2(h) of this appendix.

(g) *Airplane demonstration.* For each airplane-engine combination to be approved for ETOPS, the applicant must flight test at least one airplane to demonstrate that the airplane, and its components and equipment are capable of functioning properly during ETOPS flights and diversions of the longest duration for which the applicant seeks approval. This flight testing may be performed in conjunction with, but may not substitute for the flight testing required by § 21.35(b)(2) of this chapter.

(1) The airplane demonstration flight test program must include:

(i) Flights simulating actual ETOPS, including flight at normal cruise altitude, step climbs, and, if applicable, APU operation.

(ii) Maximum duration flights with maximum duration diversions.

(iii) Maximum duration engine-inoperative diversions distributed among the engines installed on the airplanes used for the airplane demonstration flight test program. At least two one-engine-inoperative diversions must be conducted at maximum continuous thrust or power using the same engine.

(iv) Flights under non-normal conditions to demonstrate the flightcrew's ability to safely conduct an ETOPS diversion with worst-case ETOPS significant system failures or malfunctions that could occur in service.

(v) Diversions to airports that represent airports of the types used for ETOPS diversions.

(vi) Repeated exposure to humid and inclement weather on the ground followed by a long-duration flight at normal cruise altitude.

(2) The airplane demonstration flight test program must validate the adequacy of the airplane's flying qualities and performance, and the flightcrew's ability to safely conduct an ETOPS diversion under the conditions specified in section K25.2.2(g)(1) of this appendix.

(3) During the airplane demonstration flight test program, each test airplane must be operated and maintained using the applicant's recommended operating and maintenance procedures.

(4) At the completion of the airplane demonstration flight test program, each ETOPS significant system must undergo an on-wing inspection or test in accordance with the tasks defined in the proposed Instructions for Continued Airworthiness to establish its condition for continued safe operation. Each engine must also undergo a gas path inspection. These inspections must be conducted in a manner to identify abnormal conditions that could result in an IFSD or diversion. The applicant must identify, track and resolve any abnormal conditions in accordance with the problem tracking and resolution system specified in section K25.2.2(h) of this appendix.

(h) *Problem tracking and resolution system.* (1) The applicant must establish and maintain a problem tracking and resolution system. The system must:

(i) Contain a process for prompt reporting to the responsible FAA aircraft certification office of each occurrence reportable under § 21.4(a)(6) encountered during the phases of airplane and engine development used to assess Early ETOPS eligibility.

(ii) Contain a process for notifying the responsible FAA aircraft certification office of each proposed corrective action that the applicant determines necessary for each problem identified from the occurrences reported under section K25.2.2. (h)(1)(i) of this appendix. The timing of the notification must permit appropriate FAA review before taking the proposed corrective action.

(2) If the applicant is seeking ETOPS type design approval of a change to an airplane-engine combination previously approved for ETOPS, the problem tracking and resolution system need only address those problems specified in the following table, provided the applicant obtains prior authorization from the FAA:

If the change does not require a new airplane type certificiate and . . .	Then the Problem Tracking and Resolution System must address . . .
(i) Requires a new engine type certificate	All problems applicable to the new engine installation, and for the remainder of the airplane, problems in changed systems only.
(ii) Does not require a new engine type certificate	Problems in changed systems only.

(i) *Acceptance criteria.* The type and frequency of failures and malfunctions on ETOPS significant systems that occur during the airplane flight test program and the airplane demonstration flight test program specified in section K25.2.2(g) of this appendix must be consistent with the type and frequency of failures and malfunctions that would be expected to occur on currently certificated airplanes approved for ETOPS.

K25.2.3. *Combined service experience and Early ETOPS method.*

An applicant for ETOPS type design approval using the combined service experience and Early ETOPS method must comply with the following requirements.

(a) A service experience requirement of not less than 15,000 engine-hours for the world fleet of the candidate airplane-engine combination.

(b) The Early ETOPS requirements of K25.2.2, except for the airplane demonstration specified in section K25.2.2(g) of this appendix; and

(c) The flight test requirement of section K25.2.1(e) of this appendix.

K25.3. *Airplanes with more than two engines.*

An applicant for ETOPS type design approval of an airplane with more than two engines must use one of the methods described in section K25.3.1, K25.3.2, or K25.3.3 of this appendix.

K25.3.1 *Service experience method.*

An applicant for ETOPS type design approval using the service experience method must comply with section K25.3.1(a) of this appendix before conducting the airplane systems assessment specified in K25.3.1(b), and the flight test specified in section K25.3.1(c) of this appendix.

(a) *Service experience.* The world fleet for the airplane-engine combination must accumulate a minimum of 250,000 engine-hours. The FAA may reduce this number of hours if the applicant identifies compensating factors that are acceptable to the FAA. The compensating factors may include experience on another airplane, but experience on the candidate airplane must make up a significant portion of the total required service experience.

(b) *Airplane systems assessment.* The applicant must conduct an airplane systems assessment. The applicant must show that the

airplane systems comply with the §25.1309(b) using available in-service reliability data for ETOPS significant systems on the candidate airplane-engine combination. Each cause or potential cause of a relevant design, manufacturing, operational or maintenance problem occurring in service must have a corrective action or actions that are shown to be effective in preventing future occurrences. Each corrective action must be identified in the CMP document specified in section K25.1.6 of this appendix. A corrective action is not required if the problem would not significantly impact the safety or reliability of the airplane system involved. A relevant problem is a problem with an ETOPS group 1 significant system that has or could result in an IFSD or diversion. The applicant must include in this assessment relevant problems with similar or identical equipment installed on other types of airplanes to the extent such information is reasonably available.

(c) *Airplane flight test*. The applicant must conduct a flight test to validate the flightcrew's ability to safely conduct an ETOPS diversion with an inoperative engine and worst-case ETOPS significant system failures and malfunctions that could occur in service. The flight test must validate the airplane's flying qualities and performance with the demonstrated failures and malfunctions.

K25.3.2 Early ETOPS method.

An applicant for ETOPS type design approval using the Early ETOPS method must comply with the following requirements:

(a) *Maintenance and operational procedures*. The applicant must validate all maintenance and operational procedures for ETOPS significant systems. The applicant must identify, track and resolve any problems found during the validation in accordance with the problem tracking and resolution system specified in section K25.3.2(e) of this appendix.

(b) *New technology testing*. Technology new to the applicant, including substantially new manufacturing techniques, must be tested to substantiate its suitability for the airplane design.

(c) *APU validation test*. If an APU is needed to comply with this appendix, one APU of the type to be certified with the airplane must be tested for 3,000 equivalent airplane operational cycles. Following completion of the test, the APU must be disassembled and inspected. The applicant must identify, track, and resolve each cause or potential cause of an inability to start or operate the APU in flight as intended in accordance with the problem tracking and resolution system specified in section K25.3.2(e) of this appendix.

(d) *Airplane demonstration*. For each airplane-engine combination to be approved for ETOPS, the applicant must flight test at least one airplane to demonstrate that the airplane, and its components and equipment are capable of functioning properly during ETOPS flights and diversions of the longest duration for which the applicant seeks approval. This flight testing may be performed in conjunction with, but may not substitute for the flight testing required by §21.35(b)(2).

(1) The airplane demonstration flight test program must include:

(i) Flights simulating actual ETOPS including flight at normal cruise altitude, step climbs, and, if applicable, APU operation.

(ii) Maximum duration flights with maximum duration diversions.

(iii) Maximum duration engine-inoperative diversions distributed among the engines installed on the airplanes used for the airplane demonstration flight test program. At least two one engine-inoperative diversions must be conducted at maximum continuous thrust or power using the same engine.

(iv) Flights under non-normal conditions to validate the flightcrew's ability to safely conduct an ETOPS diversion with worst-case ETOPS significant system failures or malfunctions that could occur in service.

(v) Diversions to airports that represent airports of the types used for ETOPS diversions.

(vi) Repeated exposure to humid and inclement weather on the ground followed by a long duration flight at normal cruise altitude.

(2) The airplane demonstration flight test program must validate the adequacy of the airplane's flying qualities and performance, and the flightcrew's ability to safely conduct an ETOPS diversion under the conditions specified in section K25.3.2(d)(1) of this appendix.

(3) During the airplane demonstration flight test program, each test airplane must be operated and maintained using the applicant's recommended operating and maintenance procedures.

(4) At the completion of the airplane demonstration, each ETOPS significant system must undergo an on-wing inspection or test in accordance with the tasks defined in the proposed Instructions for Continued Airworthiness to establish its condition for continued safe operation. Each engine must also undergo a gas path inspection. These inspections must be conducted in a manner to identify abnormal conditions that could result in an IFSD or diversion. The applicant must identify, track and resolve any abnormal conditions in accordance with the problem tracking and resolution system specified in section K25.3.2(e) of this appendix.

(e) *Problem tracking and resolution system*. (1) The applicant must establish and maintain a problem tracking and resolution system. The system must:

(i) Contain a process for prompt reporting to the responsible FAA aircraft certification office of each occurrence reportable under

§ 21.4(a)(6) encountered during the phases of airplane and engine development used to assess Early ETOPS eligibility.

(ii) Contain a process for notifying the responsible FAA aircraft certification office of each proposed corrective action that the applicant determines necessary for each problem identified from the occurrences reported under section K25.3.2(h)(1)(i) of this appendix. The timing of the notification must permit appropriate FAA review before taking the proposed corrective action.

(2) If the applicant is seeking ETOPS type design approval of a change to an airplane-engine combination previously approved for ETOPS, the problem tracking and resolution system need only address those problems specified in the following table, provided the applicant obtains prior authorization from the FAA:

If the change does not require a new airplane type certificate and . . .	Then the Problem Tracking and Resolution System must address . . .
(i) Requires a new engine type certificate	All problems applicable to the new engine installation, and for the remainder of the airplane, problems in changed systems only.
(ii) Does not require a new engine type certificate	Problems in changed systems only.

(f) *Acceptance criteria*. The type and frequency of failures and malfunctions on ETOPS significant systems that occur during the airplane flight test program and the airplane demonstration flight test program specified in section K25.3.2(d) of this appendix must be consistent with the type and frequency of failures and malfunctions that would be expected to occur on currently certificated airplanes approved for ETOPS.

K25.3.3 *Combined service experience and Early ETOPS method*.

An applicant for ETOPS type design approval using the Early ETOPS method must comply with the following requirements:

(a) A service experience requirement of less than 15,000 engine-hours for the world fleet of the candidate airplane-engine combination;

(b) The Early ETOPS requirements of section K25.3.2 of this appendix, except for the airplane demonstration specified in section K25.3.2(d) of this appendix; and

(c) The flight test requirement of section K25.3.1(c) of this appendix.

[Doc. No. FAA–2002–6717, 72 FR 1873, Jan. 16, 2007]

APPENDIX L TO PART 25—HIRF ENVIRONMENTS AND EQUIPMENT HIRF TEST LEVELS

This appendix specifies the HIRF environments and equipment HIRF test levels for electrical and electronic systems under § 25.1317. The field strength values for the HIRF environments and equipment HIRF test levels are expressed in root-mean-square units measured during the peak of the modulation cycle.

(a) HIRF environment I is specified in the following table:

TABLE I.—HIRF ENVIRONMENT I

Frequency	Field strength (volts/meter)	
	Peak	Average
10 kHz–2 MHz	50	50
2 MHz–30 MHz	100	100
30 MHz–100 MHz	50	50
100 MHz–400 MHz	100	100
400 MHz–700 MHz	700	50
700 MHz–1 GHz	700	100
1 GHz–2 GHz	2,000	200
2 GHz–6 GHz	3,000	200
6 GHz–8 GHz	1,000	200
8 GHz–12 GHz	3,000	300
12 GHz–18 GHz	2,000	200
18 GHz–40 GHz	600	200

In this table, the higher field strength applies at the frequency band edges.

(b) HIRF environment II is specified in the following table:

TABLE II.–HIRF ENVIRONMENT II

Frequency	Field strength (volts/meter)	
	Peak	Average
10 kHz–500 kHz	20	20
500 kHz–2 MHz	30	30
2 MHz–30 MHz	100	100
30 MHz–100 MHz	10	10
100 MHz–200 MHz	30	10
200 MHz–400 MHz	10	10
400 MHz–1 GHz	700	40
1 GHz–2 GHz	1,300	160
2 GHz–4 GHz	3,000	120
4 GHz–6 GHz	3,000	160
6 GHz–8 GHz	400	170
8 GHz–12 GHz	1,230	230
12 GHz–18 GHz	730	190
18 GHz–40 GHz	600	150

In this table, the higher field strength applies at the frequency band edges.

(c) *Equipment HIRF Test Level 1*.

(1) From 10 kilohertz (kHz) to 400 megahertz (MHz), use conducted susceptibility tests with continuous wave (CW) and 1 kHz

square wave modulation with 90 percent depth or greater. The conducted susceptibility current must start at a minimum of 0.6 milliamperes (mA) at 10 kHz, increasing 20 decibels (dB) per frequency decade to a minimum of 30 mA at 500 kHz.

(2) From 500 kHz to 40 MHz, the conducted susceptibility current must be at least 30 mA.

(3) From 40 MHz to 400 MHz, use conducted susceptibility tests, starting at a minimum of 30 mA at 40 MHz, decreasing 20 dB per frequency decade to a minimum of 3 mA at 400 MHz.

(4) From 100 MHz to 400 MHz, use radiated susceptibility tests at a minimum of 20 volts per meter (V/m) peak with CW and 1 kHz square wave modulation with 90 percent depth or greater.

(5) From 400 MHz to 8 gigahertz (GHz), use radiated susceptibility tests at a minimum of 150 V/m peak with pulse modulation of 4 percent duty cycle with a 1 kHz pulse repetition frequency. This signal must be switched on and off at a rate of 1 Hz with a duty cycle of 50 percent.

(d) *Equipment HIRF Test Level 2.* Equipment HIRF test level 2 is HIRF environment II in table II of this appendix reduced by acceptable aircraft transfer function and attenuation curves. Testing must cover the frequency band of 10 kHz to 8 GHz.

(e) *Equipment HIRF Test Level 3.*

(1) From 10 kHz to 400 MHz, use conducted susceptibility tests, starting at a minimum of 0.15 mA at 10 kHz, increasing 20 dB per frequency decade to a minimum of 7.5 mA at 500 kHz.

(2) From 500 kHz to 40 MHz, use conducted susceptibility tests at a minimum of 7.5 mA.

(3) From 40 MHz to 400 MHz, use conducted susceptibility tests, starting at a minimum of 7.5 mA at 40 MHz, decreasing 20 dB per frequency decade to a minimum of 0.75 mA at 400 MHz.

(4) From 100 MHz to 8 GHz, use radiated susceptibility tests at a minimum of 5 V/m.

[Doc. No. FAA–2006–23657, 72 FR 44026, Aug. 6, 2007]

PART 26—CONTINUED AIRWORTHINESS AND SAFETY IMPROVEMENTS FOR TRANSPORT CATEGORY AIRPLANES

Subpart A—General

Sec.
26.1 Purpose and scope.
26.3 Definitions.
26.5 Applicability table.

Subpart B—Enhanced Airworthiness Program for Aging Systems

Sec.
26.11 Electrical wiring interconnection systems (EWIS) maintenance program.

Subpart C–D[Reserved]

Subpart E—Aging Airplane Safety—Damage Tolerance Data for Repairs and Alterations

26.41 Definitions.
26.43 Holders of and applicants for type certificates—Repairs.
26.45 Holders of type certificates—Alterations and repairs to alterations.
26.47 Holders of and applicants for a supplemental type certificate—Alterations and repairs to alterations.
26.49 Compliance plan.

AUTHORITY: 49 U.S.C. 106(g), 40113, 44701, 44702 and 44704.

SOURCE: Docket No. FAA–2004–18379, Amdt. No. 26–0, 72 FR 63409, Nov. 8, 2007, unless otherwise noted.

Subpart A—General

§ 26.1 Purpose and scope.

(a) This part establishes requirements for support of the continued airworthiness of and safety improvements for transport category airplanes. These requirements may include performing assessments, developing design changes, developing revisions to Instructions for Continued Airworthiness (ICA), and making necessary documentation available to affected persons. Requirements of this part that establish standards for design changes and revisions to the ICA are considered airworthiness requirements.

(b) Except as provided in paragraph (c) of this section, this part applies to the following persons, as specified in each subpart of this part:

(1) Holders of type certificates and supplemental type certificates.

(2) Applicants for type certificates and supplemental type certificates and changes to those certificates (including service bulletins describing design changes).

(3) Persons seeking design approval for airplane repairs, alterations, or modifications that may affect airworthiness.