APPENDIX A TO PART 25

Appendix A

FIGURE 1—Basic landing gear dimension data.

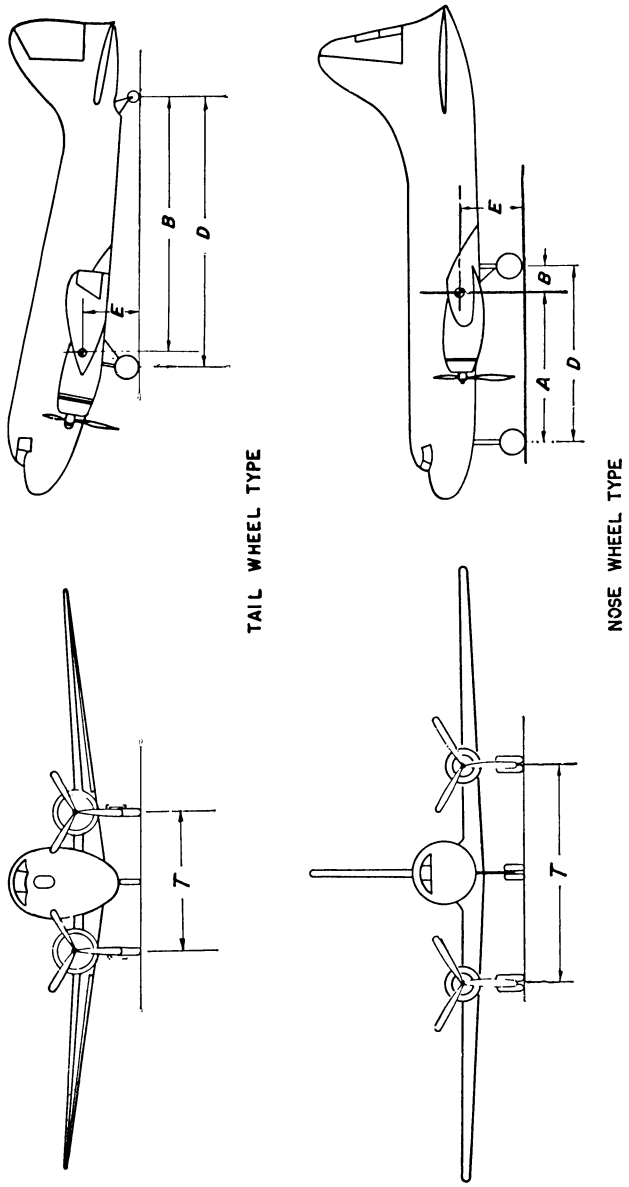

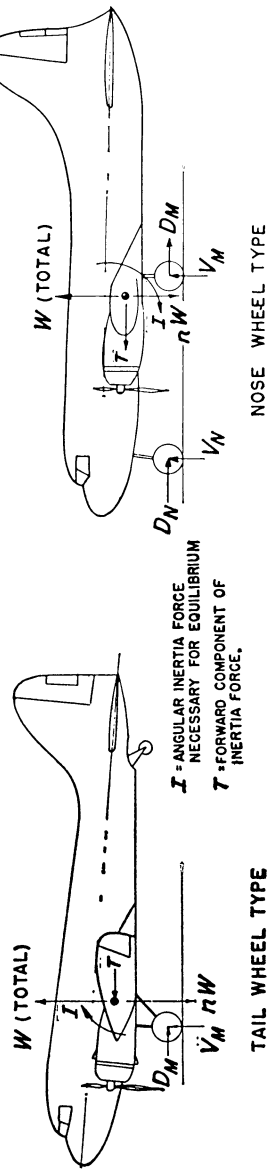

FIGURE 2—Level landing.

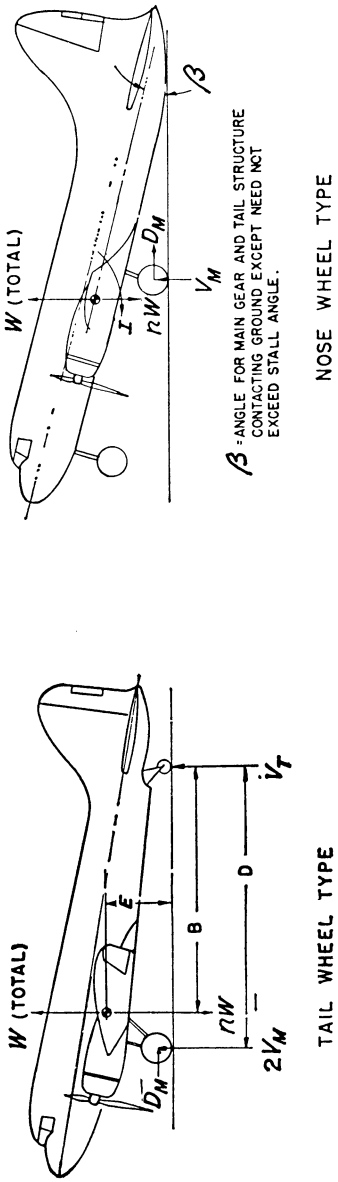

FIGURE 3—Tail-down landing.

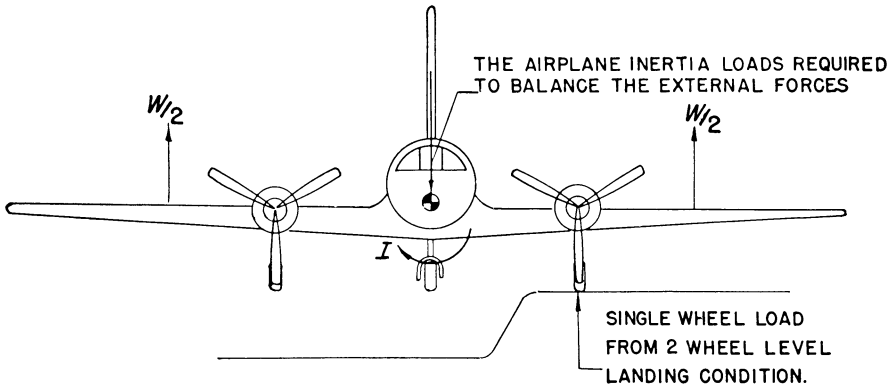

NOSE OR TAIL WHEEL TYPE

FIGURE 5—Lateral drift landing.

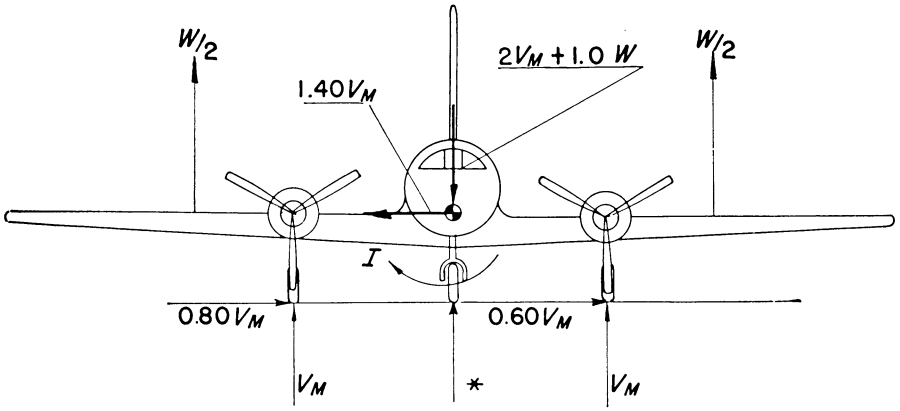

NOSE OR TAIL WHEEL TYPE AIRPLANE IN LEVEL ALTITUDE

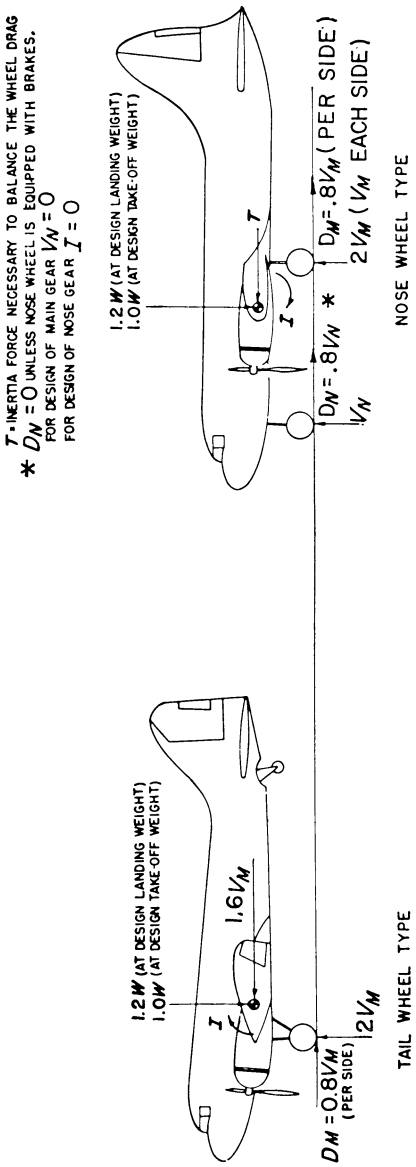

FIGURE 6—Braked roll.

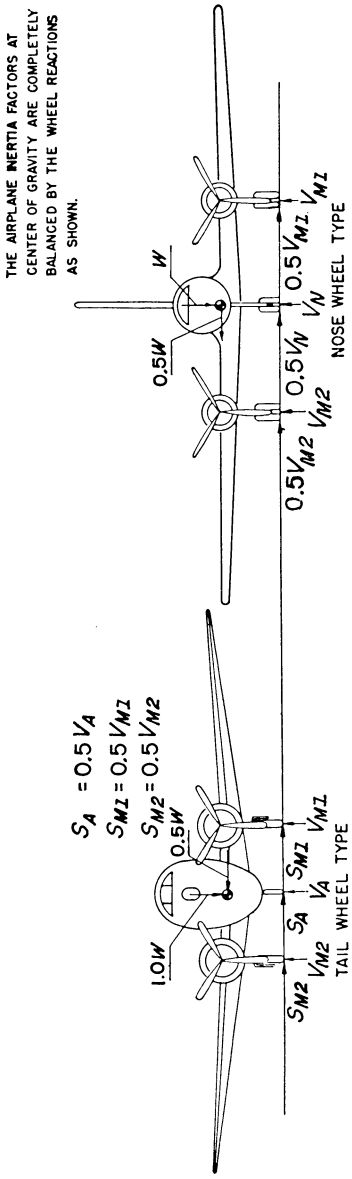

FIGURE 7—Ground turning.

FIGURE 8—Pivoting, nose or tail wheel type.

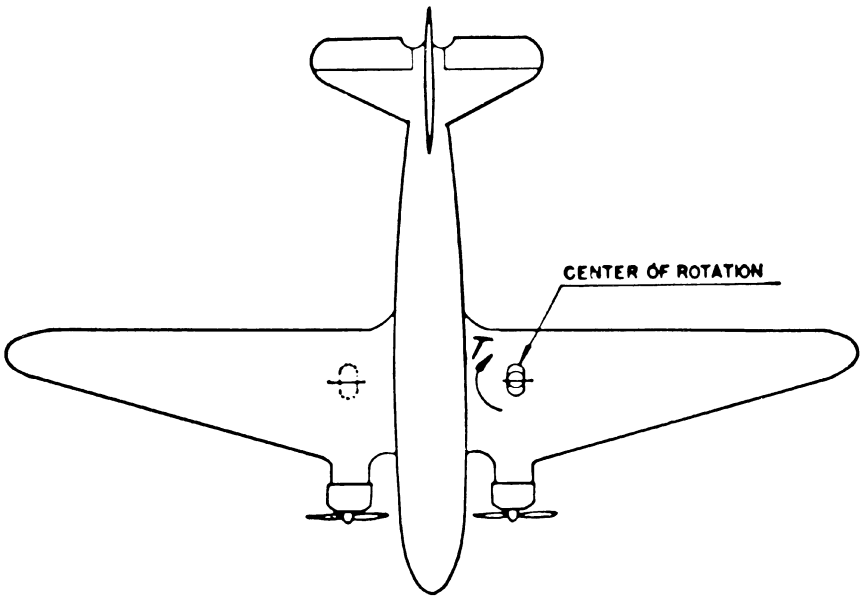
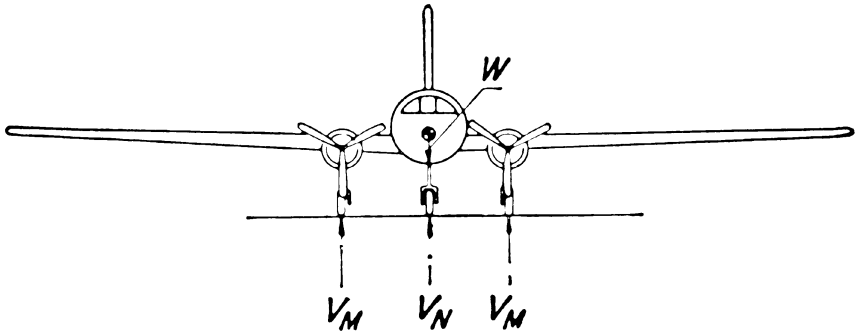
V_N and V_M are static ground reactions. For tail wheel type the airplane is in the three point attitude. Pivoting is assumed to take place about one main landing gear unit.