Federal Register

Tuesday,
December 21, 2010

Part II

Environmental Protection Agency

40 CFR Part 51

Methods for Measurement of Filterable PM_{10} and $PM_{2.5}$ and Measurement of Condensable PM Emissions From Stationary Sources; Final Rule

ENVIRONMENTAL PROTECTION AGENCY

40 CFR Part 51

[EPA–HQ–OAR–2008–0348; FRL–9236–2]

RIN 2060–AO58

Methods for Measurement of Filterable PM_{10} and $PM_{2.5}$ and Measurement of Condensable PM Emissions From Stationary Sources

AGENCY: Environmental Protection Agency (EPA).

ACTION: Final rule.

SUMMARY: This action promulgates amendments to Methods 201A and 202. The final amendments to Method 201A add a particle-sizing device to allow for sampling of particulate matter with mean aerodynamic diameters less than or equal to 2.5 micrometers ($PM_{2.5}$ or fine particulate matter). The final amendments to Method 202 revise the sample collection and recovery procedures of the method to reduce the formation of reaction artifacts that could lead to inaccurate measurements of condensable particulate matter. Additionally, the final amendments to Method 202 eliminate most of the hardware and analytical options in the existing method, thereby increasing the precision of the method and improving the consistency in the measurements obtained between source tests performed under different regulatory authorities.

This action also announces that EPA is taking no action to affect the already established January 1, 2011 sunset date for the New Source Review (NSR) transition period, during which EPA is not requiring that State NSR programs address condensable particulate matter emissions.

DATES: This final action is effective on January 1, 2011.

ADDRESSES: EPA has established a docket for this action under Docket ID No. EPA–HQ–OAR–2008–0348. All documents are listed in the *http://www.regulations.gov* index. Although listed in the index, some information is not publicly available, e.g., confidential business information (CBI) or other information whose disclosure is restricted by statute. Certain other material, such as copyrighted material, will be publicly available only in hard copy form. Publicly available docket materials are available either electronically at *http://www.regulations.gov* or in hard copy at the EPA Docket Center EPA/DC, EPA West, Room 3334, 1301 Constitution Ave., NW., Washington, DC. The Public Reading Room is open from 8:30 a.m. to 4:30 p.m., Monday through Friday, excluding legal holidays. The telephone number for the Public Reading Room is (202) 566–1744, and the telephone number for the Air Docket Center is (202) 566–1742.

FOR FURTHER INFORMATION CONTACT: For general information, contact Ms. Candace Sorrell, U.S. EPA, Office of Air Quality Planning and Standards, Air Quality Assessment Division, Measurement Technology Group (E143–02), Research Triangle Park, NC 27711; telephone number: (919) 541–1064; fax number; (919) 541–0516; e-mail address: *sorrell.candace@epa.gov.* For technical questions, contact Mr. Ron Myers, U.S. EPA, Office of Air Quality Planning and Standards, Sector Policies and Programs Division, Measurement Policy Group (D243–05), Research Triangle Park, NC 27711; telephone number: (919) 541–5407; fax number: (919) 541–1039; e-mail address: *myers.ron@epa.gov.*

SUPPLEMENTARY INFORMATION:

Acronyms and Abbreviations. The following acronyms and abbreviations are used in this document.

Δp_{max} maximum velocity pressure
Δp_{min} minimum velocity pressure
µm micrometers
ASTM American Society for Testing and Materials
AWMA Air and Waste Management Association
CAA Clean Air Act
CBI confidential business information
CCM Controlled Condensation Method
CPM condensable PM
DOP dioctyl phthalate
DOT Department of Transportation
DQO data quality objective
MSHA Mine Safety and Health Administration
NAAQS National Ambient Air Quality Standards
NSR New Source Review
NTTAA National Technology Transfer and Advancement Act of 1995
OSHA Occupational Safety and Health Administration
PCB polychlorinated biphenyl
PM particulate matter
PM_{10} particulate matter less than or equal to 10 micrometers
$PM_{2.5}$ particulate matter less than or equal to 2.5 micrometers
ppmw parts per million by weight
PTFE polytetrafluoropolymer
RCRA Resource Conservation and Recovery Act
RFA Regulatory Flexibility Act
SBA Small Business Administration
SIP State Implementation Plan
SO_2 sulfur dioxide
TDS total dissolved solids
TTN Technology Transfer Network
UMRA Unfunded Mandates Reform Act
www World Wide Web

The information in this preamble is organized as follows:

I. General Information
A. Does this action apply to me?
B. Where can I obtain a copy of this action and other related information?
C. What is the effective date?
D. Judicial Review
II. Background
A. Why is EPA issuing this final action?
B. Particulate Matter National Ambient Air Quality Standards
C. Measuring PM Emissions
1. Method 201A
2. Method 202
III. Summary of Changes Since Proposal
A. Method 201A
B. Method 202
C. How will the final amendments to methods 201A and 202 affect existing emission inventories, emission standards, and permit programs?
IV. Summary of Final Methods
A. Method 201A
B. Method 202
V. Summary of Public Comments and Responses
A. Method 201A
B. Method 202
C. Conditional Test Method 039 (Dilution Method)
VI. Statutory and Executive Order Reviews
A. Executive Order 12866: Regulatory Planning and Review
B. Paperwork Reduction Act
C. Regulatory Flexibility Act
D. Unfunded Mandates Reform Act
E. Executive Order 13132: Federalism
F. Executive Order 13175: Consultation and Coordination With Indian Tribal Governments
G. Executive Order 13045: Protection of Children From Environmental Health and Safety Risks
H. Executive Order 13211: Actions Concerning Regulations That Significantly Affect Energy Supply, Distribution, or Use
I. National Technology Transfer and Advancement Act
J. Executive Order 12898: Federal Actions To Address Environmental Justice in Minority Populations and Low-Income Populations
K. Congressional Review Act

I. General Information

A. Does this action apply to me?

This action applies to you if you operate a stationary source that is subject to applicable requirements to control or measure total particulate matter (PM), total PM with mean aerodynamic diameters less than or equal to 10 micrometers (µm) (PM_{10}), or total $PM_{2.5}$, where EPA Method 202 is incorporated as a component of the applicable test method.

In addition, this action applies to you if federal, State, or local agencies take certain additional independent actions. For example, this action applies to sources through actions by State and local agencies that implement condensable PM (CPM) control measures to attain the National Ambient

Air Quality Standards (NAAQS) for $PM_{2.5}$ and specify the use of Method 202 to demonstrate compliance with the control measures. State and local agencies that specify the use of Method 201A or 202 would have to implement the following: (1) Adopt this method in rules or permits (either by incorporation by reference or by duplicating the method in its entirety), and (2) promulgate an emissions limit requiring the use of Method 201A or 202 (or an incorporated method based upon Method 201A or 202). This action also applies to stationary sources that are required to meet new applicable CPM requirements established through federal or State permits or rules, such as New Source Performance Standards and New Source Review (NSR), which specify the use of Method 201A or 202 to demonstrate compliance with the control measures.

The source categories and entities potentially affected include, but are not limited to, the following:

Category	NAICS [a]	Examples of regulated entities
Industry	332410	Fossil fuel steam generators.
	332410	Industrial, commercial, institutional steam generating units.
	332410	Electricity generating units.
	324110	Petroleum refineries.
	562213	Municipal waste combustors.
	322110	Pulp and paper mills.
	325188	Sulfuric acid plants.
	327310	Portland cement plants.
	327410	Lime manufacturing plants.
	211111, 212111, 212112, 212113	Coal preparation plants.
	331312, 331314	Primary and secondary aluminum plants.
	331111, 331513	Iron and steel plants.
	321219, 321211, 321212	Plywood and reconstituted products plants.

[a] North American Industrial Classification System.

B. Where can I obtain a copy of this action and other related information?

In addition to being available in the docket, an electronic copy of these final rules are also available on the World Wide Web (*http://www.epa.gov/ttn/*) through the Technology Transfer Network (TTN). Following the Administrator's signature, a copy of these final rules will be posted on the TTN's policy and guidance page for newly proposed or promulgated rules at *http://www.epa.gov/ttn/oarpg.* The TTN provides information and technology exchange in various areas of air pollution control.

C. What is the effective date?

The final rule amendments are effective on January 1, 2011. Section 553(d) of the Administrative Procedure Act (APA), 5 U.S.C. Chapter 5, generally provides that rules may not take effect earlier than 30 days after they are published in the **Federal Register**. EPA is issuing this final rule under section 307(d)(1) of the Clean Air Act, which states: "The provisions of section 553 through 557 * * * of Title 5 shall not, except as expressly provided in this section, apply to actions to which this subsection applies." Thus, section 553(d) of the APA does not apply to this rule. EPA is nevertheless acting consistently with the purposes underlying APA section 553(d) in making this rule effective on January 1, 2011. Section 5 U.S.C. 553(d)(3) allows an effective date less than 30 days after publication "as otherwise provided by the agency for good cause found and published with the rule." As explained below, EPA finds that there is good cause for these rules to become effective on or before January 1, 2011, even if this date is not 30 days from date of publication in the **Federal Register**.

While this action is being signed prior to December 1, 2010, there may be a delay in the publication of this rule as it contains many complex diagrams, equations, and charts, and is relatively long in length. The purpose of the 30-day waiting period prescribed in 5 U.S.C. 553(d) is to give affected parties a reasonable time to adjust their behavior and prepare before the final rule takes effect. Where, as here, the final rule will be signed and made available on the EPA website more than 30 days before the effective date, but where the publication may be delayed due to the complexity and length of the rule, that purpose is still met. Moreover, since permitting authorities and regulated entities may need to rely on the methods described in these rules to carry out requirements of the SIP and NSR implementation rules that become effective on January 1, 2011 (*see* section III.C, infra), there would be unnecessary regulatory confusion if a publication delay caused this rule to become effective after January 1, 2011. Accordingly, we find good cause exists to make this rule effective on or before January 1, 2011, consistent with the purposes of 5 U.S.C. 553(d)(3).[1]

D. Judicial Review

Under section 307(b)(1) of the Clean Air Act (CAA), judicial review of this final action is available only by filing a petition for review in the United States Court of Appeals for the District of Columbia Circuit by February 22, 2011. Under CAA section 307(b)(2), the requirements established by this action may not be challenged separately in any civil or criminal proceedings brought by EPA to enforce these requirements.

Section 307(d)(7)(B) of the CAA further provides that "[o]nly an objection to a rule or procedure which was raised with reasonable specificity during the period for public comment (including any public hearing) may be raised during judicial review." This section also provides a mechanism for EPA to convene a proceeding for reconsideration, "[i]f the person raising an objection can demonstrate to EPA that it was impracticable to raise such objection within [the period for public comment] or if the grounds for such objection arose after the period for public comment (but within the time specified for judicial review) and if such objection is of central relevance to the outcome of the rule." Any person seeking to make such a demonstration to us should submit a Petition for Reconsideration to the Office of the Administrator, U.S. EPA, Room 3000,

[1] We recognize that this rule could be published at least 30 days before January 1, 2011, which would negate the need for this good cause finding, and we plan to request expedited publication of this rule in order to decrease the likelihood of a publication delay. However, as we cannot know the date of publication in advance of signing this rule, we are proceeding with this good cause finding for an effective date on or before January 1, 2011, in an abundance of caution in order to avoid the unnecessary regulatory confusion noted above.

Ariel Rios Building, 1200 Pennsylvania Ave., NW., Washington, DC 20460, with a copy to both the person(s) listed in the preceding **FOR FURTHER INFORMATION CONTACT** section, and the Associate General Counsel for the Air and Radiation Law Office, Office of General Counsel (Mail Code 2344A), U.S. EPA, 1200 Pennsylvania Ave., NW., Washington, DC 20460.

II. Background

A. Why is EPA issuing this final action?

Section 110 of the CAA, as amended (42 U.S.C. 7410), requires State and local air pollution control agencies to develop, and submit for EPA approval, State Implementation Plans (SIP) that provide for the attainment, maintenance, and enforcement of the NAAQS in each air quality control region (or portion thereof) within each State. The emissions inventories and analyses used in the State's attainment demonstrations must consider PM_{10} and $PM_{2.5}$ emissions from stationary sources that are significant contributors of primary PM_{10} and $PM_{2.5}$ emissions. Primary or direct emissions are the solid particles or liquid droplets emitted directly from an air emissions source or activity, and the gaseous emissions or liquid droplets from an air emissions source or activity that condense to form PM or liquid droplets at ambient temperatures.

Appendix A to subpart A of 40 CFR part 51 (Requirements for Preparation, Adoption, and Submittal of Implementation Plans) defines primary PM_{10} and $PM_{2.5}$ as including both the filterable and condensable fractions of PM. Filterable PM consists of those particles that are directly emitted by a source as a solid or liquid at the stack (or similar release conditions) and captured on the filter of a stack test train. Condensable PM is the material that is in vapor phase at stack conditions but condenses and/or reacts upon cooling and dilution in the ambient air to form solid or liquid PM immediately after discharge from the stack. In response to the need to quantify primary PM_{10} and $PM_{2.5}$ emissions from stationary sources, EPA previously developed and promulgated Method 201A (Determination of PM_{10} Emissions (Constant Sampling Rate Procedure)) and Method 202 (Determination of Condensable Particulate Emissions from Stationary Sources) in 40 CFR part 51, appendix M (Recommended Test Methods for State Implementation Plans).

On April 17, 1990 (56 FR 65433), EPA promulgated Method 201A in appendix M of 40 CFR part 51 to provide a test method for measuring filterable PM_{10} emissions from stationary sources. In EPA Method 201A, a gas sample is extracted at a constant flow rate through an in-stack sizing device that directs particles with aerodynamic diameters less than or equal to 10 μm to a filter. The particulate mass collected on the filter is determined gravimetrically after removal of uncombined water.

On December 17, 1991 (56 FR 65433), EPA promulgated Method 202 in appendix M of 40 CFR part 51 to provide a test method for measuring CPM from stationary sources. Method 202 uses water-filled impingers to cool, condense, and collect materials that are vaporous at stack conditions and become solid or liquid PM at ambient air temperatures. Method 202, as promulgated in 1991, contains several optional procedures that were intended to accommodate the various test methods used by State and local regulatory entities at the time Method 202 was being developed.

In this action, we are finalizing amendments to Methods 201A and 202 to improve the measurement of fine PM emissions. For Method 201A, the final amendments add a particle-sizing device to allow for sampling of $PM_{2.5}$ emissions. For Method 202, the final amendments will (1) revise the sample collection and recovery procedures of the method to reduce the potential for formation of reaction artifacts that are not related to the primary emission of CPM from the source but may be counted erroneously as CPM when using Method 202, and (2) eliminate most of the hardware and analytical options in the existing method. These changes increase the precision of Method 202 and improve the consistency in the measurements obtained between source tests performed under different regulatory authorities.

B. Particulate Matter National Ambient Air Quality Standards

Section 108 and 109 of the CAA govern the establishment and revision of the NAAQS. Section 108 of the CAA (42 U.S.C. 7408) directs the Administrator to identify and list "air pollutants" that "in his judgment, may reasonably be anticipated to endanger public health and welfare" and whose "presence * * * in the ambient air results from numerous or diverse mobile or stationary sources" and to issue air quality criteria for those that are listed. Air quality criteria are intended to "accurately reflect the latest scientific knowledge useful in indicating the kind and extent of identifiable effects on public health or welfare which may be expected from the presence of [a] pollutant in ambient air * * *." Section 109 of the CAA (42 U.S.C. 7409) directs the Administrator to propose and promulgate primary and secondary NAAQS for pollutants listed under CAA section 108 to protect public health and welfare, respectively. Section 109 of the CAA also requires review of the NAAQS at 5-year intervals and that an independent scientific review committee "shall complete a review of the criteria * * * and the national primary and secondary ambient air quality standards * * * and shall recommend to the Administrator any new * * * standards and revisions of existing criteria and standards as may be appropriate * * *." Since the early 1980s, this independent review function has been performed by the Clean Air Scientific Advisory Committee.

Initially, EPA established the PM NAAQS on April 30, 1971 (36 FR 8186), based on the original criteria document (Department of Health, Education, and Welfare, 1969). The reference method specified for determining attainment of the original standards was the high-volume sampler, which collects PM up to a nominal size of 25 to 45 μm (referred to as total suspended particulates or TSP). On October 2, 1979 (44 FR 56730), EPA announced the first periodic review of the air quality criteria and PM NAAQS, and significant revisions to the original standards were promulgated on July 1, 1987 (52 FR 24634). In that decision, EPA changed the indicator for particles from TSP to PM_{10}. When that rule was challenged, the court upheld revised standards in all respects. *Natural Resources Defense Council* v. *Administrator,* 902 F. 2d 962 (D.C. Cir. 1990, cert. denied, 498 U.S. 1082 (1991).

In April 1994, EPA announced its plans for the second periodic review of the air quality criteria and PM NAAQS, and the Agency promulgated significant revisions to the NAAQS on July 18, 1997 (62 FR 38652). In that decision, EPA revised the PM NAAQS in several respects. While EPA determined that the PM NAAQS should continue to focus on particles less than or equal to 10 μm in diameter (PM_{10}), EPA also determined that the fine and coarse fractions of PM_{10} should be considered separately. EPA added new standards, using $PM_{2.5}$ as the indicator for fine particles (with $PM_{2.5}$ referring to particles with a nominal mean aerodynamic diameter less than or equal to 2.5 μm), and using PM_{10} as the indicator for purposes of regulating the coarse fraction of PM_{10}.

Following promulgation of the 1997 PM NAAQS, petitions for review were filed by a large number of parties

addressing a broad range of issues. In May 1999, a three-judge panel of the U.S. Court of Appeals for the District of Columbia Circuit issued an initial decision that upheld EPA's decision to establish fine particle standards. *American Trucking Associations* v. *EPA,* 175 F.3d 1027, 1055 (D.C. Cir. 1999), reversed in part on other grounds in *Whitman* v. *American Trucking Associations,* 531 U.S. 457 (2001). The panel also found "ample support" for EPA's decision to regulate coarse particle pollution, but vacated the 1997 PM_{10} standards concluding that EPA had not provided a reasonable explanation justifying use of PM_{10} as an indicator for coarse particles. (Id. at 1054–55.) Pursuant to the court's decision, EPA removed the vacated 1997 PM_{10} standards but retained the pre-existing 1987 PM_{10} standards (65 FR 80776, December 22, 2000).

On October 23, 1997, EPA published its plans for the third periodic review of the air quality criteria and PM NAAQS (62 FR 55201), including the 1997 $PM_{2.5}$ standards and the 1987 PM_{10} standards. On October 17, 2006, EPA issued its final decision to revise the primary and secondary PM NAAQS to provide increased protection of public health and welfare respectively (71 FR 61144). With regard to the primary and secondary standards for fine particles, EPA revised the level of the 24-hour $PM_{2.5}$ standard to 35 μg per cubic meter (μg/m^3), retained the level of the annual $PM_{2.5}$ annual standard at 15 μg/m^3, and revised the form of the annual $PM_{2.5}$ standard by narrowing the constraints on the optional use of spatial averaging. With regard to the primary and secondary standards for PM_{10}, EPA retained the 24-hour PM_{10} standard (150 μg/m^3) and revoked the annual standard because available evidence generally did not suggest a link between long-term exposure to current ambient levels of coarse particles and health or welfare effects.

C. Measuring PM Emissions

Section 110 of the CAA, as amended (42 U.S.C. 7410), requires State and local air pollution control agencies to develop and submit plans (SIP) for EPA approval that provide for the attainment, maintenance, and enforcement of the NAAQS in each air quality control region (or portion thereof) within such State. 40 CFR part 51 (Requirements for Preparation, Adoption, and Submittal of Implementation Plans) specifies the requirements for SIP. Appendix A to subpart A of 40 CFR part 51, defines primary PM_{10} and $PM_{2.5}$ as including both the filterable and condensable fractions of PM. Filterable PM consists of those particles directly emitted by a source as a solid or liquid at the stack (or similar release conditions) and captured on the filter of a stack test train. Condensable PM is the material that is in vapor phase at stack conditions but which condenses and/or reacts upon cooling and dilution in the ambient air to form solid or liquid PM immediately after discharge from the stack.

Promulgation of the 1987 NAAQS created the need for methods to quantify PM_{10} emissions from stationary sources. In response, EPA developed and promulgated the following test methods:

- Method 201A—Determination of PM_{10} Emissions (Constant Sampling Rate Procedure), and
- Method 202—Determination of Condensable Particulate Emissions from Stationary Sources.

1. Method 201A

Method 201A is a test method for measuring filterable PM_{10} emissions from stationary sources. With the exception of the PM_{10}-sizing device, the current Method 201A sampling train is the same as the sampling train used for EPA Method 17 of appendix A–3 to 40 CFR part 60.

Method 201A cannot be used to measure emissions from stacks that have entrained moisture droplets (e.g., from a wet scrubber stack) since these stacks may have water droplets that are larger than the cut size of the PM_{10} sizing device. The presence of moisture would prevent an accurate measurement of total PM_{10} since any PM_{10} dissolved in larger water droplets would not be collected by the sizing device and would consequently be excluded in determining total PM_{10} mass. To measure PM_{10} in stacks where water droplets are known to exist, EPA's Technical Information Document 09 (Methods 201 and 201A in Presence of Water Droplets) recommends use of Method 5 of appendix A–3 to 40 CFR part 60 (or a comparable method) and consideration of the total particulate catch as PM_{10} emissions.

Method 201A is also not applicable for stacks with small diameters (*i.e.,* 18 inches or less). The presence of the in-stack nozzle/cyclones and filter assembly in a small duct will cause significant cross-sectional area interference and blockage leading to incorrect flow calculation and particle size separation. Additionally, the type of metal used to construct the Method 201A cyclone may limit the applicability of the method when sampling at high stack temperatures (*e.g.,* stainless steel cyclones are reported to gall and seize at temperatures greater than 260 °C).

2. Method 202

Method 202 measures CPM from stationary sources. Method 202 contains several optional procedures that were intended to accommodate the various test methods used by State and local regulatory entities at the time Method 202 was being developed.

When conducted consistently and carefully, Method 202 provides acceptable precision for most emission sources. Method 202 has been used successfully in regulatory programs where the emission limits and compliance demonstrations are established based on a consistent application of the method and its associated options. However, when the same emission source is tested using different combinations of the optional procedures, there appears to be large variations in the measured CPM emissions. Additionally, during validation of the promulgated method, we determined that sulfur dioxide (SO_2) gas (a typical component of emissions from several types of stationary sources) can be absorbed partially in the impinger solutions and can react chemically to form sulfuric acid. This sulfuric acid "artifact" is not related to the primary emission of CPM from the source, but may be counted erroneously as CPM when using Method 202. We consistently maintain that the artifact formation can be reduced by at least 90 percent if a one-hour nitrogen purge of the impinger water is used to remove SO_2 before it can form sulfuric acid (this is our preferred application of the Method 202 optional procedures). Inappropriate use or omission of the preferred or optional procedures in Method 202 can increase the potential for artifact formation.

Considering the potential for variations in measured CPM emissions, we believe that further verification and refinement of Method 202 is appropriate to minimize the potential for artifact formation. We performed several studies to assess artifact formation when using Method 202. The results of our 1998 laboratory study and field evaluation commissioned to evaluate the impinger approach can be found in "Laboratory and Field Evaluation of EPA's Method 5 Impinger Catch for Measuring Condensible Matter from Stationary Sources" at *http://www.epa.gov/ttn/emc/methods/m202doc1.pdf.*

The 1998 study verified the need for a nitrogen purge when SO_2 is present in stack gas and provided guidance for analyzing the collected samples. In 2005, an EPA contractor conducted a

second study, "Laboratory Evaluation of Method 202 to Determine Fate of SO_2 in Impinger Water," that replicated some of the earlier EPA work and addressed some additional issues. The report of that work is available at *http://www.epa.gov/ttn/emc/methods/m202doc2.pdf.* This report also verified the need for a nitrogen purge and identified the primary factors that affect artifact formation.

Also in 2005, a private testing contractor presented a possible minor modification to Method 202 at the Air and Waste Management Association (AWMA) specialty conference. The proposed modification, as described in their presentation titled "Optimized Method 202 Sampling Train to Minimize the Biases Associated with Method 202 Measurement of Condensable Particulate Matter Emissions," involved the elimination of water from the first impingers. The presentation (available at *http://www.epa.gov/ttn/emc/methods/m202doc3.pdf*) concluded that modification of the promulgated method to use dry impingers resulted in a significant additional reduction in the sulfate artifact.

In 2006, we began to conduct laboratory studies in collaboration with several stakeholders to characterize the artifact formation and other uncertainties associated with conducting Method 202 and to identify procedures that would minimize uncertainties when using Method 202. Since August 2006, we conducted two workshops in Research Triangle Park, NC to present and request comments on our plan for evaluating potential modifications to Method 202 that would reduce artifact formation, and also to discuss (1) Our progress in characterizing the performance of the modified method, (2) issues that require additional investigation, (3) the results of our laboratory studies, and (4) our commitments to extend the investigation through stakeholders external to EPA. Another meeting was held with experienced stack testers and vendors of emissions monitoring equipment to discuss hardware issues associated with modifications of the sampling equipment and the glassware for the proposed CPM test method. Summaries of the method evaluations, as well as meeting minutes from our workshops, can be found at *http://www.epa.gov/ttn/emc/methods/method202.html.*

The laboratory studies that were performed fulfill a commitment in the preamble to the Clean Air Fine Particle Implementation Rule (72 FR 20586, April 25, 2007) to examine the relationship between several critical CPM sampling and analysis parameters and, to the extent necessary, promulgate revisions to incorporate improvements in the method. While these improvements in the stationary source test method for CPM will provide for more accurate and precise measurement of all PM, the addition of $PM_{2.5}$ as an indicator of health and welfare effects by the 1997 NAAQS revisions generates the need to quantify $PM_{2.5}$ emissions from stationary sources. To respond to this need, we are promulgating revisions to incorporate this capability into the test method for filterable PM_{10}.

III. Summary of Changes Since Proposal

The methods in this final action contain several changes that were made as a result of public comments. The following sections present a summary of the changes to the methods. We explain the reasons for these changes in detail in the Summary of Public Comments and Responses section of this preamble.

A. Method 201A

Method 201A contains the following changes and clarifications:

- Revised Section 1.5 to clarify that Method 201A cannot be used to measure emissions from stacks that have entrained moisture droplets (e.g., from a wet scrubber stack).
- Removed the language in proposed Section 1.5 regarding ambient air contributions to PM. The decision to correct results for ambient air contributions is up to the permitting or regulatory authority.
- Added definitions of Primary PM, Filterable PM, Primary $PM_{2.5}$, Primary PM_{10}, and CPM to Section 3.0.
- Added a requirement to Sections 6.1.3 and 8.6.3 stating that the filter must not be compressed between the gasket and the filter housing.
- Clarified the sample recovery and analysis equipment in Section 6.2, including acceptable materials of construction, analytical balance, and fluoropolymer (polytetrafluoroethylene) beaker liners.
- Revised Section 6.2 to add performance-based, residual mass contribution specifications for containers rather than specifying the type of container that must be used (storage containers must not contribute more than 0.1 mg of residual mass to the CPM measurements).
- Revised Section 8.3.1 (regarding sampling ports) to state that a 4-inch port should be adequate for the single $PM_{2.5}$ (or single PM_{10}) sampling apparatus. However, testers will not be able to use conventional 4-inch ports if the combined dimension of the PM_{10} cyclone and the nozzle extending from the cyclone exceeds the internal diameter of the port.
- Clarified the sampling procedures in Section 8.3.1 for cases where the $PM_{2.5}$ cyclone is used without the PM_{10} cyclone. In these cases, samples are collected using the procedures specified in Section 11.3.2.2 of EPA Method 1, and the sampling time is extended at the replacement sampling point to include the duration of the unreachable traverse points.
- Revised Section 8.3.2.2 to clarify that Method 201A is not applicable for stack diameters less than 26.5 inches when the combined $PM_{10}/PM_{2.5}$ cyclone is used. The in-stack nozzle/cyclones and filter assembly in stacks less than 26.5 inches in diameter would cause significant cross-sectional area interference and blockage, leading to incorrect flow calculation and particle size separation.
- Revised Section 8.5.5 to express the maximum failure rate of values outside the minimum-maximum velocity pressure range in terms of percent of values outside the range instead of the number of traverse points outside the range.
- Revised section 8.6.1 to clarify that alternative designs are acceptable for fastening caps or covers to cyclones to avoid galling of the cyclone component threads in hot stacks. The method may be used at temperatures up to 1,000°F using stainless steel cyclones that are bolted together, rather than screwed together. Using "break-away" stainless steel bolts facilitates disassembly and circumvents the problem of thread galling.
- Clarified sampling procedures in Section 8.7.3.3 to maintain the temperature of the cyclone sampling head within ± 10 °C of the stack temperature and to maintain flow until after removing and before inserting the sampling head.
- Revised Section 11.2.7 to allow the use of tared fluoropolymer beaker liners for the acetone field reagent blank.

B. Method 202

Method 202 contains the following changes and clarifications:

- Clarified the terminology used to refer to laboratory and field blanks throughout the method.
- For health and safety reasons, replaced the use of methylene chloride with hexane throughout the method.
- Clarified Section 1.2 by moving the discussion of filterable PM methods used in conjunction with Method 202 to Section 1.5.

• Clarified Section 1.6 to specify that Method 202 can be used for measuring CPM in stacks that contain entrained moisture if the sampling temperature is sufficiently high to keep the moisture in the vapor phase.

• Moved the recommendation to develop a health and safety plan from Section 9.4 to Section 5.0.

• Added amber glass bottles to the list of sample recovery equipment in Section 6.2.

• Added alternatives (fluoropolymer beaker liners or fluoropolymer baggies) to weighing tins to the list of analytical equipment in Section 6.2.2 (Section 6.3 of the proposed method).

• Added specifications for sample drying equipment in Section 6.2.2 (Section 6.3 of the proposed method).

• Clarified Section 6.3.7 regarding the use of an analytical balance with sensitivity to 0.00001 g (0.01 milligram).

• Added an option to use a colorimetric pH indicator instead of a pH meter in Section 6.2.2 (Section 6.3 of the proposed method).

• Added a sonication device to the list of analytical equipment in Section 6.2.2 (Section 6.3 of the proposed method).

• Added performance-based, residual mass contribution specifications for containers and wash bottles in Section 6.2.2 (Section 6.3 of the proposed method) rather than specifying the type of container that must be used.

• Replaced the prescriptive language regarding filter materials in Section 7.1.1 with performance-based requirements limiting the residual mass contribution.

• Replaced the prescriptive language regarding water quality in Section 7.1.3 with performance-based requirements for residual mass content.

• Clarified Section 8.2 to specify that cleaned glassware must be used at the start of each new source category tested at a single facility.

• Added a performance-based option to Section 8.4 to conduct a field train proof blank rather than meeting the glassware baking requirements in Section 8.2.

• Clarified the sampling train configuration for the nitrogen purge procedures in Section 8.5.3.2 regarding pressurized purges.

C. How will the final amendments to methods 201A and 202 affect existing emission inventories, emission standards, and permit programs?

We anticipate that over time the changes in the test methods finalized in this action will result in, among other positive outcomes, more accurate emissions inventories of direct PM emissions and emissions standards that are more indicative of the actual impact of the source on the ambient air quality.

Accurate emission inventories are critical for regulatory agencies to develop the control strategies and demonstrations necessary to attain air quality standards. When implemented, the test method revisions should improve our understanding of PM emissions due to the increased availability of more accurate emission tests and eventually through the incorporation of less biased test data into existing emissions factors. For CPM, the use of the revised method could reveal a reduced level of CPM emissions from a source compared to the emissions that would have been measured using Method 202 as typically performed. However, there may be some cases where the revised test method would reveal an increased level of CPM emissions from a source, depending on the relative emissions of filterable and CPM emissions from the source. For example, the existing Method 202 allows complete evaporation of the water containing inorganic PM at 105 °C (221 °F), where the revised method requires the last 10 ml of the water to be evaporated at room temperature (not to exceed 30 °C (85 °F)), thereby retaining the CPM that would evaporate at the increased temperature.

Prior to our adoption of the 1997 $PM_{2.5}$ NAAQS, several State and local air pollution control agencies had developed emission inventories that included CPM. Additionally, some agencies established enforceable CPM emissions limits or otherwise required that PM emissions testing include measurement of CPM. While this approach was viable in cases where the same test method was used to develop the CPM regulatory limits and to demonstrate facility compliance, there are substantial inconsistencies within and between States regarding the completeness and accuracy of CPM emission inventories and the test methods used to measure CPM emissions and demonstrate facility compliance.

These amendments would serve to mitigate the potential difficulties that can arise when EPA and other regulatory entities attempt to use the test data from State and local agencies with inconsistent CPM test methods to develop emission factors, determine program applicability, or to establish emissions limits for CPM emission sources within a particular jurisdiction. For example, problems can arise when the test method used to develop a CPM emission limit is not the same as the test method specified in the rule for demonstrating compliance because the different test methods may quantify different components of PM (*e.g.,* filterable versus condensable). Also, when emissions from State inventories are modeled to assess compliance with the NAAQS, the determination of direct PM emissions may be biased high or low, depending on the test methods used to estimate PM emissions, and the atmospheric conversion of SO_2 to sulfates (or sulfur trioxide, SO_3) may be inaccurate or double-counted. Additionally, some State and local regulatory authorities have assumed that EPA Method 5 of appendix A–3 to 40 CFR part 60 (Determination of Particulate Matter Emissions from Stationary Sources) provides a reasonable estimate of PM_{10} emissions. This assumption is incorrect because Method 5 does not provide particle sizing of the filterable component and does not quantify particulate caught in the impinger portion of the sampling train. Similar assumptions for measurements of $PM_{2.5}$ will result in greater inaccuracies.

With regard to State permitting programs, we recognize that, in some cases, existing best available control technology, lowest achievable emission rate, or reasonably available control technology limits have been based on an identified control technology, and that the data used to determine the performance of that technology and to establish the limits may have focused on filterable PM and, thus, did not completely characterize PM emissions to the ambient air. While the source test methods used by State programs that developed the applicable permit limit may not have fully characterized the PM emissions, we have no information that would indicate that the test methods are inappropriate indicators of the control technologies' performance for the portion of PM emissions that was addressed by the applicable requirement. As promulgated in the Clean Air Fine Particle Implementation Rule, after January 1, 2011, States are required to consider inclusion of CPM emissions in new or revised emissions limits that they establish. We will defer to the individual State's judgment as to whether, and at what time it is appropriate to revise existing facility emission limits or operating permits to incorporate information from the revised CPM test method when it is promulgated.

With regard to operating permits, the title V permit program does not generally impose new substantive air quality control requirements. In general, after emissions limits are established as CAA requirements under the SIP or a

SIP-approved pre-construction review permit, they are included in the title V permits. Obviously, title V permits should be updated to reflect any revision of existing emission limits or new emission limits created in the context of the underlying applicable requirements. Also, if a permit contains previously promulgated test methods, it is not a given that the permit would always have to be revised should these test method changes be finalized (*e.g.,* where test methods are incorporated into existing permits through incorporation by reference, no permit terms or conditions would necessarily have to change to reflect changes to those test methods). In any event, the need for action related to emissions source permitting, due to these changes to the test methods, would be determined based upon several factors such as the exact wording of the existing operating permit, the requirements of the EPA-approved SIP, and any changes that may need to be made to pre-construction review permits with respect to CPM measurement (*e.g.,* emissions estimates may be based upon a source test method that did not measure CPM or upon a set of Method 202 procedures that underestimated CPM emissions).

In recognition of these issues, the Clean Air Fine Particle Implementation Rule contains provisions establishing a transition period for developing emission limits for condensable direct $PM_{2.5}$ that are needed to demonstrate attainment of the $PM_{2.5}$ NAAQS. The transition period for CPM is the time period during which the new rules and NSR permits issued to stationary sources are not required to address the condensable fraction of the sources' PM emissions. The end date of the transition period (January 1, 2011) was adopted in the final Clean Air Fine Particle Implementation Rule (72 FR 20586, April 25, 2007) and in the final Implementation of the New Source Review Program for Particulate Matter Less Than 2.5 Micrometers ($PM_{2.5}$) rule (73 FR 28321, May 16, 2008). As discussed in these two rules, the intent of the transition period (which ends January 1, 2011) was to allow time for EPA to issue a CPM test method through notice and comment rulemaking, and for sources and States to collect additional total primary (filterable and condensable) $PM_{2.5}$ emissions data to improve emissions information to the extent possible. In the $PM_{2.5}$ NSR Implementation Rule, we stated that as part of this test methods rulemaking, we would "take comment on an earlier closing date for the transition period in the NSR program if we are on track to meet our expectation to complete the test method rule much earlier than January 1, 2011" (73 FR 28344). In the notice of proposed rulemaking for this final rule on amendments to Method 201A and 202, EPA sought comment on whether to end the NSR transition period for CPM early (74 FR 12976). In this final rule, EPA is taking no action to affect the already established January 1, 2011 sunset date for the NSR transition period.

Source test data collected with the use of this updated test method will be incorporated into the tools (e.g., emission factors, emission inventories, air quality modeling) used to demonstrate the attainment of air quality standards. Areas that are designated nonattainment for the 1997 $PM_{2.5}$ NAAQS, and that have approved attainment dates of 2014 or 2015, are required to develop a mid-course review in 2011. If it is determined that additional control measures are needed to ensure the area will be on track to attain the standard by the attainment date, any new direct $PM_{2.5}$ emission limits adopted by the State must address the condensable fraction and the filterable fraction of $PM_{2.5}$. Additionally, the new test data could be used to improve the applicability and performance evaluations of various control technologies.

IV. Summary of Final Methods

A. Method 201A

Method 201A measures PM emissions from stationary sources. The amendments to Method 201A add a $PM_{2.5}$ measurement device ($PM_{2.5}$ cyclone) that allows the method to measure filterable $PM_{2.5}$, filterable PM_{10}, or both filterable $PM_{2.5}$ and filterable PM_{10}. The method can also be used to measure coarse particles (i.e., the difference between measured PM_{10} concentration and the measured $PM_{2.5}$ concentration).

The amendments also add a $PM_{2.5}$ cyclone to create a sampling train that includes a total of two cyclones (one cyclone to segregate particles with aerodynamic diameters greater than 10 μm and one cyclone to segregate particles with aerodynamic diameters greater than 2.5 μm) and a final filter to collect particles with aerodynamic diameters less than or equal to 2.5 μm. The $PM_{2.5}$ cyclone is inserted between the PM_{10} cyclone and the filter of the Method 201A sampling train.

The revised method has several limitations. The method cannot be used to measure emissions from stacks that have entrained moisture droplets (e.g., from a wet scrubber stack) because size separation of the water droplets is not representative of the dry particle size released into the air. In addition, the method is not applicable for stacks with diameters less than 25.7 inches when the combined $PM_{10}/PM_{2.5}$ cyclone is used. Also, the method may not be suitable for sources with stack gas temperatures exceeding 260 °C (500 °F) when cyclones with screw-together caps are used because the threads of the cyclone components may gall or seize, thus preventing the recovery of the collected PM. However, the method may be used at temperatures up to 1,000 °F when using stainless steel cyclones that are bolted together rather than screwed together. Using "break-away" stainless steel bolts facilitates disassembly and circumvents the problem of thread galling. The method may also be used at temperatures up to 2,500 °F when using specialty high-temperature alloys.

B. Method 202

Method 202 measures concentrations of CPM in stationary source sample gas after the filterable PM has been removed using another test method such as Method 5, 17, or 201A. The CPM sampling train begins at the back half of the filterable PM filter holder and consists of a condenser, two dry impingers (temperatures maintained to less than 30 °C (85 °F)), and a CPM filter (temperature maintained between 20 °C (65 °F) and 30 °C (85 °F)). During the test, sample gases are cooled and CPM is collected in the dry impingers and on the CPM filter. As soon as possible after the post-test leak check has been conducted, any water collected in the dry impingers is purged with nitrogen gas for at least one hour to remove dissolved SO_2 gas.

After the nitrogen purge, the sampling train components downstream of the filterable PM filter (*i.e.,* the probe extension (if any), condenser, impingers, front half of CPM filter holder, and the CPM filter) are rinsed with water to recover the inorganic CPM. The water rinse is followed by an acetone rinse and a hexane rinse to recover the organic CPM. The CPM filter is extracted using water to recover the inorganic components and hexane to recover the organic portion. The inorganic and organic fractions are then dried and the residues weighed. The sum of both fractions represents the total CPM collected by Method 202.

V. Summary of Public Comments and Responses

In response to the March 25, 2009 proposed revisions to EPA Methods 201A and 202, EPA received public

comment letters from industry representatives, trade associations, State agencies, and environmental organizations. The public comments submitted to EPA addressed the proposed revisions to Methods 201A and 202 and our request for comments on whether to end the transition period for CPM in the NSR program on a date earlier than the current end date of January 1, 2011.

This section provides responses to the more significant public comments received on the proposed revisions to Methods 201A and 202. Summaries and responses for all comments related to the proposed revisions to Methods 201A and 202, including those addressed in this preamble, are contained in the response to comments document located in the docket for this final action (Docket ID No. EPA–HQ–OAR–2008–0348).

A. Method 201A

1. Speciation

Comment: One commenter stated that EPA should include guidance in Method 201A concerning speciation of the constituents present in the PM_{10}, PM_{10}–$PM_{2.5}$, and $PM_{2.5}$ size fractions. The commenter believes this information should be provided to support the use of speciated PM_{10}, PM_{10}–$PM_{2.5}$, and $PM_{2.5}$ data in source apportionment studies.

Response: EPA did not revise the method to provide guidance for speciation of various particle fractions for source apportionment because Method 201A is not a speciation method. However, with judicious selection of filter media, sources may use this method for speciating the less volatile metals and use these data in source apportionment studies. Including details to adapt this method for speciation analysis would unduly increase the complexity of the method without increasing the precision of the mass measurements.

2. Catch Weight and Sampling Times

Comment: Several commenters requested that EPA specify the minimum solids catch weights needed in the PM_{10} and $PM_{2.5}$ size fractions to help testing organizations determine the necessary sampling times, especially for sources with low PM concentrations. Other commenters expressed concern about extended sampling times that would be necessary to obtain enough sample to weigh accurately. One commenter stated that a reasonable limit must be put on sampling volume to limit potentially unnecessary sampling time and exorbitant stack testing costs that could quickly escalate with such a requirement.

Response: We agree with the commenters that collecting sufficient weighable mass is important for the method to be precise. We also understand that the sampling rate used to attain the cyclone cut-points is typically less than the rate used during Method 5 sampling. However, EPA did not revise the method to dictate a minimum sampling volume or minimum catch weight that would be necessary to obtain a valid sample. One reason for not specifying a minimum sampling volume or minimum catch weight is that different regulatory authorities and testing programs have differing measurement goals. For example, some regulatory authorities will accept less precision if results are well below compliance limits. State agencies or individual regulated facilities may develop data quality objectives (DQO) for the test program, which may specify minimum detection limits, and/or minimum sample volume, and/or catch weight that would demonstrate that DQO can be met. Stack samplers should take into consideration the compliance limits set by their regulatory authority and determine the minimum amount of stack gas needed to show compliance if the mass of particulate is below the detection limit.

Stack testers can use the minimum detection limit to determine the minimum stack gas volume. The stack tester may be able to estimate the necessary stack gas volume based on how much PM the source or source category is expected to emit (which could be determined from a previous test or from knowledge of the emissions for that source category).

Alternatively, the minimum detection limit for a source can be determined by calculating the percent relative standard deviation for a series of field train recovery blanks. You will not be able to measure below the average train recovery blank level, and EPA recommends calculating a tester-specific detection limit by multiplying the standard deviation of field recovery train blanks by the appropriate "Student's t value" (*e.g.,* for seven field train recovery blanks, the standard deviation of the results would be multiplied by three). Short of having Method 201A field recovery train blanks for cyclone and filter components of the sampling train, you may use the detection limit determined from EPA field tests.

An estimated detection limit was determined from an EPA field evaluation of proposed Method 201A (*see* "Field Evaluation of an Improved Method for Sampling and Analysis of Filterable and Condensable PM," Docket ID No. EPA–HQ–OAR–2008–0348). The estimated detection limit was calculated from the standard deviation of the differences from 10 quadruplicate sampling runs multiplied by the appropriate "Student's t value" ($n - 1 = 9$). Detection limits determined in this manner were (1) Total filterable PM: 2.54 mg; (2) PM_{10}: 1.44 mg; and (3) $PM_{2.5}$: 1.35. These test runs showed more filterable particulate in the $PM_{2.5}$ fraction, and total filterable particulate detection limits may be biased high due to the small particulate mass collected in the fraction greater than PM_{10}.

Comment: Two commenters questioned the use of reference methods to correct for ambient air in Section 1.5 of the proposed Method 201A. One commenter believed that the statement would be used as a means to blame non-compliance on ambient contributions and would result in legal challenges and disputes of test results. The other commenter questioned whether it was the intent of EPA to not allow the use of the CPM test method for low-temperature sources.

Response: We agree with the commenters that Section 1.5 of the proposed method was unclear. Thus, Section 1.5 (Additional Methods) has been removed from the final method. For sources that have very low PM emissions, such as processes that burn clean fuels (*e.g.,* natural gas) and/or use large volumes of dilution air (*e.g.,* gas turbines and thermal oxidizers), any ambient air particulate introduced into the process operation could be a large component of total outlet PM emissions. However, the decision to correct results for fine PM measurements to account for ambient air contributions is up to the permitting or regulatory authority. It is likely that these adjustments would be limited to gas turbines and possibly sources fired with clean natural gas.

Comment: Commenters expressed concern about the lack of a test method to measure $PM_{2.5}$ in stacks with entrained moisture. Another commenter urged EPA to continue work to identify or develop a method for measuring filterable (or total) PM at sources with entrained moisture droplets in the stack (e.g., units with wet stacks due to wet flue gas desulfurization or wet scrubbers). Commenters requested that EPA provide guidance or identify a viable alternative for high-moisture stacks as soon as possible. One commenter stated that when conducting emission testing at facilities with similar wet stack conditions as described in the proposal preamble (74 FR 12973), that they support EPA's position on the

limitations of the proposed Method 201A.

One commenter was not satisfied with the use of Method 5 as the only acceptable method for sources with entrained water droplets. To provide more accurate emissions data for sources with "wet" stacks, the commenter is sponsoring the development of an advanced manual sampling technique that can accurately measure filterable $PM_{2.5}$ in stacks with entrained water droplets. The commenter expects to complete field tests of this method in the near future. The commenter will share laboratory and field test evaluations of this new method. The commenter believes that this new method for filterable $PM_{2.5}$ emissions in "wet" stacks will be highly compatible with proposed Method 201A for filterable $PM_{2.5}$ emission testing in "dry" stacks.

Response: We are currently developing a method to measure PM in stacks with saturated water vapors and laboratory testing is ongoing. EPA has committed a significant budget and personnel to developing an acceptable method for sources with wet stacks and we plan to offer the method and protocol as soon as possible. EPA's method development and evaluation is focused on the "Dried Particle Method" (*See* "Lab Work to Evaluate $PM_{2.5}$ Collection with a Dilution Monitoring Device for Data Gathering for Emission Factor Development (Final Report)" in Docket ID No. EPA–HQ–OAR–2008–0348) that directly measures the mass emission rate of particles with specified aerodynamic size. In the meantime, the promulgated amendments to Methods 201A and 202 improve their performance and reduce known artifacts. Testers should use these final, amended methods until a $PM_{2.5}$ method for stack gases containing water droplets is promulgated.

Regarding the advanced manual sampling technique that the commenter is currently developing for use in "wet" stacks, EPA acknowledges the sampling evaluations being conducted by the commenter. When the data become available, we will review the data to determine if the consistency and performance achieved by the advanced manual sampling technique referenced by the commenter are comparable to EPA's wet-stack sampling method currently under development. If the data are comparable, we will consider whether the commenter's sampling technique should be addressed (*e.g.,* as an alternative method) when we propose an EPA wet-stack, particle-sizing method in the future.

Comment: Several commenters disagreed with EPA's recommendation to use Method 5 on stacks with entrained moisture and to consider all the collected mass to be $PM_{2.5}$. Commenters stated that the categorization of all PM measured by Method 5 as $PM_{2.5}$ overstates the true emissions. One commenter supported EPA's recommendation to use Method 5 to determine PM_{10}/$PM_{2.5}$ filterable mass when measuring emissions following a wet scrubber. Another commenter stated that when conducting emissions testing at facilities with similar wet stack conditions, as described in the proposal preamble (74 FR 12973), they supported EPA's position on the limitations of the proposed Method 201A.

Response: EPA acknowledges that using Method 5 on stacks with entrained moisture and assuming that the catch is $PM_{2.5}$ can potentially overestimate $PM_{2.5}$ concentrations. EPA Method 5 measures total PM mass emissions from stationary sources. Method 5 does not specifically isolate PM_{10} or $PM_{2.5}$. Method 17, similar to Method 5, measures total PM mass emissions, but it uses an in-stack filter operating at stack temperature instead of a heated probe and out-of-stack heated filter and thus, is suitable for only dry sources.

Monitoring the emission of PM_{10} or $PM_{2.5}$ from a wet gas stream is a challenging problem that has not been addressed successfully despite considerable effort. A consensus method to provide this information has not emerged. EPA has determined that particulate from wet stacks is expected to be primarily PM_{10} under most conditions typical of good wet scrubber design and operation. University of North Carolina particle physicists performed theoretical calculations based on a wet scrubber operating at 10,000 parts per million by weight (ppmw) total dissolved solids (TDS) with water droplets up to 50 μm in size (*see* "Development of Plans for Monitoring Emissions of $PM_{2.5}$ and PM_{10} from Stationary Sources With Wet Stacks," Docket ID No. EPA–HQ–OAR–2008–0348). They determined that water droplets under these conditions, when dried, would generate particles of 10 μm or less. Using the same theoretical basis (i.e., the ratio of TDS to water droplet size), EPA expects that water droplets up to 10 μm in size would generate dried particles of 2 μm or less and that water droplets up to 20 μm would generate dried particles up to 4 μm or less.

Based on wet scrubber operation and typical mist eliminator performance, EPA has determined that the Method 5 filterable particulate measurements are a satisfactory approximation of $PM_{2.5}$ filterable particulate from controlled wet stack emissions. It is the States' or regulatory authorities' responsibility to interpret EPA's recommendation to use Method 5 when measuring PM in stacks containing water droplets and to consider all of the collected material to be $PM_{2.5}$.

Because a completely acceptable method for measuring $PM_{2.5}$ in wet stacks is not currently available, EPA understands the need to support the States with a $PM_{2.5}$ method for wet stacks. EPA is currently developing this method and laboratory testing is ongoing. EPA has committed a significant budget and personnel to developing an acceptable method for sources with wet stacks, as explained above. In the meantime, the promulgated amendments to Methods 201A and 202 improve their performance and reduce known artifacts. Testers should use these final, amended methods until a $PM_{2.5}$ method for wet stack conditions is promulgated.

Comment: Several commenters expressed concern about the limitation of the method for stack temperatures greater than 500 °F. One commenter asked that EPA investigate a possible modification to the method to utilize sampling equipment that can withstand higher stack temperatures. The commenter also introduced the possibility of moving the particle sizing device, at least for $PM_{2.5}$, out of the stack and into a heated box, enabling use of a glass-lined probe for sampling. Another commenter stated that the operator of a hot stack should not be required to "take extraordinary measures" (such as using the metal Inconel) when such measures are not defined in the method, no less tested in the field for accuracy. The commenter encouraged EPA to develop an acceptable substitute method for hot stacks. As an alternative, the commenter recommended that Method 5 testing, in conjunction with AP–42 particle size distribution data specific to glass furnaces, should be used for measurement of $PM_{2.5}$ in hot stacks.

Response: EPA investigated additional alternatives to allow the use of screwed together cyclones at elevated stack temperatures. As a result of this investigation, EPA has revised Section 8.6.1 of Method 201A to allow the method to be used at temperatures up to 1,000 °F (538 °C) using stainless steel cyclones that are bolted together, rather than screwed together. Using "break-away" stainless steel bolts facilitates disassembly and circumvents the problem of thread galling. If the

stainless steel bolts seize, over-torquing such bolts causes them to break at the bolt head, thus releasing the cyclones without damaging the cyclone flanges (*see* "Review of Draft EPA Test Methods 201A and 202 Related to the Use of High Temperature and Out-of-Stack Cyclone Collection," Southern Research Institute, EPA Docket ID No. EPA–HQ–OAR–2008–0348). The method can be used at temperatures up to 2,500 °F using specially constructed high-temperature stainless steel alloys (Hastelloy or Haynes 230) with bolt-together closures using break-away bolts (*see* also "Development of Particle Size Test Methods for Sampling High Temperature and High Moisture Sources," California Environmental Protection Agency, Air Resources Board Research Division, 1994, NTIS PB95–170221).

Regarding the use of a heated box external to the stack to house the cyclones, EPA disagrees with this approach because of the potential for significant losses of particulate in the nozzle and probe liner. EPA expects that transport losses for particles in the size range of interest would be significant enough to materially affect the measurement results. These losses would be caused by deposition primarily by impaction in the sampling nozzle (at the flow rates used in PM_{10} and $PM_{2.5}$ sampling) and settling losses in horizontal probes. (*See* "Review of Draft EPA Test Methods 201A and 202 Related to the Use of High Temperature and Out-of-Stack Cyclone Collection, Southern Research Institute," EPA Docket ID No. EPA–HQ–OAR–2008–0348.)

Sampling from ducts smaller than allowed by the blockage criteria or from ducts at high temperatures presents challenges that should be addressed by the source tester in conjunction with the regulatory authority. Method 201A does not permit the use of a nozzle and probe extension leading to an external heated oven to house the cyclones that would otherwise block stack flow or operate at stack temperatures beyond acceptable limits. Conventional screwed-together cyclones are designed to operate in stacks that have a blockage of less than three percent and have a temperature of less than 500 °F.

Regarding the use of AP–42 as a replacement for PM_{10} or $PM_{2.5}$ compliance testing, EPA has determined that this is not appropriate because of the uncertainty in the data due to variations in the particle sizing used to generate AP–42 emission factors. EPA's AP–42 particle-sizing data for sources controlled by wet scrubbers are based upon particle sizing methodologies that are affected by the same influences and uncertainties that make particle sizing in stacks with entrained water droplets a challenging technical issue. Particle-sizing information in AP–42 is based primarily upon data collected in the 1970s and early 1980s. The uncertainties associated with methods used during this period of time result in particle-sizing data that are dated and may not reflect the best sampling technology or the emissions from current control devices. Particle-sizing data from the 1970s employed many measurement methodologies that were found to introduce indeterminate biases in the particle sizing data. Also, source testers implemented measurement methods in different ways to deal with particle-sizing methodology and source-specific measurement challenges. The inconsistencies associated with addressing measurement challenges and indeterminate biases led to higher uncertainties associated with the measurement method results. Therefore, AP–42 should not be used as a replacement for contemporary emissions testing.

However, it may be acceptable to allow limited application of AP–42 particle size distributions as screening assessments when the underlying biases, uncertainties, and variations of the particle-sizing are taken into consideration. For example, one simple method involves using terms that include factors (such as the TDS of the recirculating scrubber water, estimated water droplet size distribution of the exit gas, and total liquid mass) that are already used to calculate approximate emission factors. Instruments are commercially available that can continuously monitor TDS and water flow rate, and the output from these instruments could feed into an emission factor to provide a continuous estimate of emissions that varies with process conditions. However, work needs to be done to evaluate the reliability and bias of this type of candidate estimation method. The required data inputs for this type of estimation model need to be identified and the likelihood that these inputs can be provided by the emission source needs to be confirmed. Once the input data can be readily obtained, the estimation model(s) needs to be evaluated to bring the most promising methods to fruition. (*See* "Development of Plans for Monitoring Emissions of $PM_{2.5}$ and PM_{10} from Stationary Sources with Wet Stacks, Department of Environmental Sciences and Engineering, University of North Carolina at Chapel Hill under subcontract to MACTEC Federal Programs," EPA Contact No: EP–D–05–096, Work Assignment 2–05, August 2007; Docket ID No. EPA–HQ–OAR–2008–0348).

Comment: Several commenters requested changes to Section 6 of Method 201A regarding equipment and supplies. One commenter questioned the use of glass dishes and glass 250 ml beakers for drying the filter and rinses in proposed Method 201A. Another commenter stated that, at a minimum, the method should specify glass beakers, 50 ml weighing tins, and an analytical balance with a resolution of 0.00001 g (0.01 mg). One commenter recommended that polyethylene transfer/storage bottles should be allowed to minimize the chance of breakage when in the field.

Response: We revised Sections 6.2, 11.2.4, and 11.2.7 of Method 201A to allow the use of fluoropolymer beaker liners for evaporating the particulate rinse solvent and the acetone field reagent blank, desiccating particulate to constant weight, and weighing particulate samples in the final evaporation step. We revised Section 6.2, consistent with the commenter's suggestions, and added glass beakers and an analytical balance with a resolution of 0.00001 g (0.01 mg) to the sample recovery and analytical equipment list. However, we did not include weighing tins because we determined that quantitative transfer of particles in acetone from a beaker to a weighing tin is not necessary and adds unnecessary imprecision to the final sample weight. Alternatively, EPA has changed the method to allow fluoropolymer beaker liners to be used to evaporate and weigh the samples.

EPA revised Section 6.2.1 of Method 201A by defining sample recovery items consistently with Method 5, except for wash bottles and sample storage bottles. Any container material is acceptable for wash bottles and storage bottles, but the container must not contribute more than 0.05 mg of residual mass to the CPM measurements.

Comment: Several commenters expressed concern about the proposed requirement to use a 6-inch sampling port. One commenter pointed out that using a 6-inch sampling port would be required only for the combined $PM_{10}/PM_{2.5}$ sampling apparatus. Another commenter stated that the physical dimensions of the cyclone would also cause problems with installation in the generally small fryer and dryer stacks. Another commenter noted that the partitioning of the filterable solids using bulky, in-stack cyclones creates several logistical and practical problems. The commenter

stated that the size of the in-stack separation cyclones requires 6-inch to 8-inch sampling ports that do not exist at the vast majority of stationary sources potentially affected by this final action.

Response: EPA understands the commenters' concerns regarding sampling port diameter requirements. However, facilities that are required to use Method 201A are responsible for ensuring that the stack has the appropriately sized sampling ports. The need for the larger port diameter has not changed from the requirement as stated in the 1990 version of this method. We revised Section 8.3.1 of Method 201A to more clearly describe when a 4-inch port may not accommodate the PM_{10} particle-sizing cyclone and the nozzle that extends from the cyclone and to highlight the need for a larger port in such situations.

Comment: One commenter requested that EPA adjust the allowable number of traverse points that fall outside of the range of the Δp_{min} and Δp_{max} for cases in which more than the recommended maximum 12 traverse points are sampled by Method 201A. Many agencies require that more than the recommended maximum 12 traverse points be sampled if total filterable particulate is being determined. The commenter requested that the number of allowed out-of-range values be adjusted to match the stated failure rates expressed as percentages.

Response: EPA agrees that increasing the number of allowable traverse points outside the range Δp_{min} and Δp_{max} is appropriate when more than the recommended number of traverse points are sampled. EPA has modified Section 8.5.5 of the method to allow 16 percent failure rate rounded to the nearest whole number for $PM_{2.5}$ only and 8 percent failure rate rounded to the nearest whole number if the course fraction for PM_{10} determination is included.

Comment: One commenter requested that EPA add a new section in Section 8.3.2 to address ducts with diameters less than 18 inches. The commenter stated that the new section should state that ducts with diameters less than 18 inches have blockage effects ranging from five to ten percent. Therefore, according to the commenter, when a test is conducted on these small ducts, the observed velocity pressures must be adjusted for the estimated blockage factor whenever the combined sampling apparatus blocks more than three percent of the stack or duct.

For stacks smaller than 18 inches, one commenter asked if there would still be a blockage issue even when following the proposed Method 201A procedures, especially as the stack diameter gets smaller. The commenter also asked if there was a lower limit of stack diameter where the method cannot be used.

One commenter stated that when conducting emissions testing at facilities with similar small stack (less than 18 inches in diameter) conditions, as described in the proposal preamble (74 FR 12973), their experience supported EPA's position on the limitations of the proposed Method 201A. Another commenter pointed out an error in Section 8.7.2.3 that implied that the method could be used on stacks with diameters less than 18 inches.

Another commenter requested that if testing of stacks less than 18 inches in diameter is still allowed and the testers are required to use Method 1A, then the option of using a standard pitot tube should apply.

Response: We revised Section 8.7.2.3 of Method 201A to clarify the lower limits of stack diameter for different sampling configurations. The combined $PM_{10}/PM_{2.5}$ filter sampling head and pitot tube is not applicable for stacks with a diameter less than 26.5 inches because the blockage is greater than six percent. Blockage above six percent is not allowed for the combined $PM_{10}/PM_{2.5}$ filter sampling head and pitot tube. However, measurements for only $PM_{2.5}$ may be possible using only a $PM_{2.5}$ cyclone, pitot tube, and in-stack filter for stacks with a diameter less than 26.5 inches. If the blockage exceeds three percent but is less than six percent in that configuration, you must follow the procedures outlined in Method 1A to conduct tests on stacks less than 26.5 inches in diameter. In addition, you must conduct the velocity traverse downstream of the sampling location or immediately before the test run.

We also modified Section 10.1 of the method to allow standard pitot tubes to be used downstream when significant blockage exists. As stated in Section 8.3.2.2, you must adjust the observed velocity pressures for the estimated blockage factor whenever the sampling apparatus blocks three to six percent of the stack or duct.

Comment: One commenter requested that the specification for the maximum allowable acetone blank value be changed from 0.001 percent by weight to either 1 ppmw or 0.0001 percent by weight to be consistent with the reagent specification stated in Section 7.2.1 of the method.

Response: We agree with the commenter that maximum allowable acetone blank value should be consistent with the reagent specification stated in Section 7.2.1. Thus, we revised Section 12.3.2.3 of the final method to specify the maximum allowable acetone blank in terms of weight per volume of acetone (0.1 mg per 100 ml solvent), rather than percent weight.

Comment: One commenter expressed concern about the approach in Section 12.3.2.3 of the proposed method. The commenter stated that subtracting the acetone blank mass from the individual sample masses would be acceptable if the volumes of the acetone rinses are all exactly 100 ml. However, according to the commenter, this was not reality, and the accuracy of determining the blank correction suffers from this approach. The commenter suggested that rather than subtracting the mass of the acetone rinse blank dry residue directly from the sample masses, the concentration of the acetone rinse blank should be calculated as the mg of dry residue per ml of acetone rinse blank volume limited to the concentration of residue at 1 ppmw. The commenter stated that this concentration of the dry residue would be multiplied by the volume of the acetone in ml used to collect and recover each sample from the sampling head. The commenter stated that the resulting mass would be subtracted from the dry residue mass determined for the sample of interest. According to the commenter, this approach will provide a more accurate determination of the dry residue mass from the acetone rinse blank due to processing a larger volume of acetone, and assessment of the blank mass correction for each sample as it will be proportional to the amount of acetone used to collect each sample. The commenter stated that the liquid volume of the samples and blanks could be determined by either direct volumetric measurement or by multiplying the wet weight of the sample or blank by the density of the reagent at 20 °C.

Response: We agree with the commenter and with the commenter's suggested equation. Therefore, we revised Section 12.3.2.3 of the final method to accommodate different acetone rinse volumes. However, the correction must be proportional to the amount of solvent used. Some testers may use more solvent due to heavy deposits that are difficult to remove, while other testers may use less solvent. Therefore, the maximum adjustment is 0.1 mg per 100 ml of the acetone used from the sample recovery.

B. Method 202

1. Extraction Solvent

Comment: Three commenters noted that methylene chloride is highly toxic. One commenter stated the use of

methylene chloride poses significant exposure risks to field test personnel, plant personnel working in the area of the mobile laboratory, and agency test observers. Two commenters stated that Method 202 should specify a less toxic solvent than methylene chloride, such as n-hexane.

One commenter stated that EPA should sponsor a set of tests to confirm that n-hexane or another less-toxic solvent provides the sample rinse effectiveness as methylene chloride. Another commenter encouraged EPA to conduct future studies to identify a solvent to replace methylene chloride in Proposed Method 202 and in other EPA reference methods.

Another commenter stated that the use of methylene chloride (a known carcinogen) as the cleaning and recovery solvent will require safety departments to develop procedures for appropriate handling on-site and the use of personal protection equipment for personnel that may be exposed to the solvent. The commenter noted that toluene, which is used in EPA Method 23, is a technically acceptable alternative to methylene chloride. The commenter suggested that EPA review the use of toluene as a replacement for methylene chloride in Method 202 (and OTM 028).

Response: The extraction solvent specified in a particular test method is dependent on the analyte(s) of interest. If the target analyte is known, an appropriate solvent can be identified that has the desired recovery performance for that analyte. For Method 202, the pollutant measured by the method, CPM, is defined by the method (i.e., whatever remains after the sample recovery procedures is considered to be CPM regardless of its analyte group). Although no single solvent is universally applicable to all analyte groups, methylene chloride was chosen for the proposed method based upon studies ("IERL–RTP Procedures Manual, Level 1, Environmental Assessment"; EPA–600/2–76–160a; June 1976) that showed it was the optimum solvent to recover polar and non-polar CPM.

We acknowledge the commenters' concerns regarding the toxicity of methylene chloride and the exposure hazards associated with its use, and we agree that the use of an alternative solvent is justified. However, because the recovery performance of solvents has been previously evaluated to support various EPA programs, we disagree with the commenters that additional studies are necessary to identify a suitable alternative solvent.

In identifying an alternative solvent, we initially considered specifying toluene because its extraction performance for non-polar compounds is similar to methylene chloride. However, because the vapor pressure of toluene is lower than methylene chloride, additional time would be needed to evaporate the organic samples to dryness at room temperature (30°C or less). Because the additional evaporation time would be an additional burden on testing contractors and present the risk of losing condensable organic compounds, we rejected toluene as the replacement solvent.

We also evaluated the solvents used for organic compound recovery in the analytical methods developed by EPA's Office of Solid Waste (*http://www.epa.gov/epawaste/hazard/testmethods/sw846/online/3_series.htm*). We reviewed EPA's "Test Methods for Evaluating Solid Waste, Physical/Chemical Methods" (SW–846), which was developed to support the Resource Conservation and Recovery Act (RCRA) program, to identify test methods that covered the same types of compounds expected to comprise CPM. Based upon our review of SW–846, we identified Method M–3550c (Ultrasonic Extraction) as a comparable method (M–3550c is used to extract semi-volatile organic compounds from waste samples). Section 7.4 of M–3550c, which discusses extraction solvents, lists the following extraction solvents by class of compound:

- Acetone/hexane or acetone/methylene chloride can be used to extract semivolatile organics.
- Acetone/hexane or acetone/methylene chloride can be used to extract organochlorine pesticides.
- Acetone/hexane, acetone/methylene chloride, or hexane can be used to extract polychlorinated biphenyls (PCB).

Of the above compound classes, the class that most closely relates to the type of high-molecular weight hydrocarbons expected to comprise organic CPM is PCB. Hexane is also listed as an alternative solvent (when used in combination with acetone) for the other compounds classes discussed in Section 7.4. Consequently, based upon this analysis, we have replaced methylene chloride with hexane in the final method.

2. Sample and Blank Containers

Comment: One commenter recommended that EPA revise the proposed method to specify the container type for each container (i.e., glass or plastic), and also whether the lid should have a Teflon® liner or whether another liner is acceptable.

Response: We disagree with the commenter that the method should specify the material of construction of containers used for sample and blank recovery procedures. Although we believe that the most appropriate containers are constructed of glass and equipped with a fluoropolymer lid, we also believe that testing contractors should have the flexibility to select the type of containers that meet the performance specifications of the method. Therefore, we have revised the proposed method to add a performance-based specification for containers. Section 6.2.2 of the final method specifies that the containers used for sample and blank recovery procedures must not contribute more than 0.05 mg of residual mass to the CPM measurements.

Accompanying edits were also made to the CPM container language in Section 8.5.4 (Sample Recovery).

3. CPM Filter

Comment: One commenter suggested that the language in Section 7.1.1 of the proposed method be revised to replace the term "Filter" with "CPM Filter" and replace "Teflon®" with "Teflon®, fluoropolymer or chemically equivalent." Another commenter stated that the final method should allow for alternatives to Teflon® filters, such as quartz, polytetrafluoropolymer (PTFE) coated, or PTFE filters.

Response: Based upon the comments received regarding the CPM filter, we revised the language in Section 7.1.1 to include performance-based specifications for the CPM filter rather than specifying a particular type of filter. Section 7.1.1 of the final method specifies that the CPM filter must be a non-reactive, non-disintegrating filter that does not contribute more than 0.5 mg of residual mass to the CPM measurements. The CPM filter must have an efficiency of at least 99.95 percent (less than 0.05 percent penetration) on 0.3 μm particles. Documentation of the CPM filter's efficiency is based upon test data from the supplier's quality control program.

In selecting the appropriate CPM filter, testing contractors should avoid the mistake of equating the dioctyl phthalate size for the test particles to the pore size for the filter. Filters with pore sizes larger than the test particles can retain a high percentage of very small particles. In our evaluation of different types of filters, we determined that filter sizes of 47 mm are marginal, if not unacceptable, for use. Additionally, we believe that hydrophobic filters should be used to avoid absorption of water onto the CPM filter.

4. Water Specifications

Comment: Two commenters suggested that the final method specify the level of residue allowed for the water used to clean glassware and recovery samples, as was specified for acetone and methylene chloride. One commenter stated that the maximum percent residue by weight of the water should be specified to be consistent with the reagent specifications for acetone and methylene chloride. Three commenters noted that a residual mass level is not available for ASTM International D1193–06, Type I water.

Response: The purpose of the field reagent blanks is to provide a testing contractor with information to target corrective actions, if necessary, if they have difficulty in meeting the residual mass allowance in the method. The method does not require analysis of field reagent blank samples, and the field reagent blank values are not used in correcting CPM measurements. However, we acknowledge that Figure 3 could be misleading with regard to the field reagent blanks, and we have revised Figure 3 of the final method to remove the entries for the field reagents.

We acknowledge that the residue level is not specified for ASTM International D1193–06, Type I water, and we agree with the commenters that the method should specify a residual mass level for water used to prepare glassware and recover samples. Therefore, we have revised Sections 7.1.3 and 7.2.3 of the final method to specify that glassware preparation and sampling recovery must be conducted using deionized, ultra-filtered water that meets a residual blank value of 1 ppmw or less. We have also made accompanying changes to water specified in Sections 8.4, 8.5.3.2, and 11.2.2.1 of the final method. We believe that this performance specification will provide flexibility to testing contractors in obtaining deionized, ultra-filtered water (e.g., water could be purchased with a vendor guarantee or the contractor could evaluate water they produce by evaporation and weighing of the residue).

5. Glassware Baking Requirements

Comment: Several commenters stated that the proposed requirement in Section 8.4 to bake glassware at 300°C for six hours was excessive. Several commenters stated that they had conducted experimental tests that showed that a lower baking temperature (e.g., 125°C for three hours) was sufficient to achieve the blank allowance specified in the method. One commenter stated that, based upon their experiments, no benefit was obtained from baking glassware. Another commenter stated that they had conducted numerous test runs on non-combustion sources without baking glassware and had achieved acceptable blank results. The commenter noted that there might be some emission sources where baking of glassware could be needed to meet the blank requirements, but the commenter stated that the mandatory baking requirements did not seem to be necessary for all sources. Another commenter stated that there is no laboratory data to determine if a lower temperature could be sufficient to achieve low background masses. Based upon experimental results, the commenter suggested allowing the use of baking of glassware at 125°C for three hours.

One commenter stated that, because the presence of silicone grease on impinger surfaces is highly unlikely due to the prevalence of O-rings, baking the glassware at 125°C for three hours after cleaning is adequate. The commenter added that the baking requirements should be revised because high-temperature baking would destroy or deteriorate the O-rings typically used to seal impinger components. The commenter stated that the effort to remove these O-rings before baking and then replace them after baking is time-consuming. Several commenters noted that the high-temperature baking requirements would be overly expensive (*e.g.,* for large, high-temperature ovens) and time-consuming.

Another commenter stated that the requirement for glassware baking only prior to the test makes little sense. The commenter questioned why the glassware could not be rinsed with the recovery solvents as is done between runs. The commenter noted that the proposed method mandates a reagent blank and questioned why the reagent blank could not be changed to a proof blank with a limit.

One commenter stated that the requirement to bake glassware at 300 °C for six hours should be optional because it has not been possible to fully evaluate the supporting data and the need for such high temperature is not readily apparent for all situations. The commenter noted that the "Draft Project Report—Evaluation and Improvement of Condensable Particulate Measurement" may contain this information and recommended that the effect of pre-bake temperature and time on cleanliness of blanks be clearly presented in this report and include a table comparing the effect of 300 °C for six hours versus lower glassware preparation temperatures. Otherwise, according to the commenter, this requirement would require the stack tester to bring to the testing site a large amount of pre-cleaned glassware, much more than what is currently normal for such testing.

One commenter suggested that testing contractors be allowed to meet the blank level specified in the method however they can. The commenter stated that the prescriptive temperature requirement, particularly in light of the fact that there are no data showing that the 2 mg blank cannot be achieved at lower temperatures or through other means, did not serve a purpose. Another commenter recommended that the tester start with baked glassware for the first test and then be allowed to perform additional tests reusing the same glassware after it has been cleaned by chemical methods. If the chemical cleaning of the glassware is not adequate, the commenter noted that blank values would likely elevate, possibly eliminating the test from consideration. If the blanks do not elevate, the commenter stated that this scenario would be very cost-effective and would conserve resources.

Response: Method 202 has the potential to measure CPM at very low levels. Consequently, the glassware used in the sampling train must be free from contamination to maximize the precision and accuracy of the CPM measurements. The glassware cleaning requirements contained in the proposed revisions to Method 202 were based upon experimental results that indicated that the allowable blank correction of the method could not be achieved without thorough cleaning and baking of the glassware at 300 °C for six hours.

Based upon our review of the public comments received regarding the baking requirements, we have determined that it is appropriate to provide a performance-based option in Section 8.4 for demonstrating the cleanliness of glassware used during the emission test. The option provides testing contractors with flexibility when preparing glassware while maintaining the cleanliness requirements of the method.

As an alternative to baking glassware, the final method allows testing contractors to perform a proof blank of the sampling train. Field train proof blanks are recovered on-site from a clean, fully assembled sampling train prior to the first emissions test and provide the best indication of the lowest residual mass achievable by the tester. Field train recovery blanks are recovered from a sampling train after it has been used to collect emissions samples and has been rinsed in

preparation for the second or third test in a series at a particular source. Use of field train recovery blanks allows the tester to account for and manage additional uncertainty that may be attributed to the tester's ability to clean the sampling train between test runs in the field.

6. Nitrogen Purge

Comment: Three commenters requested that the nitrogen purge procedures specified in Section 8.5 of the proposed method be revised to allow for the dry gas meter to be disconnected from the sampling train before the nitrogen purge is be conducted. Two commenters stated that EPA should eliminate the portion of Figure 2 that shows the meter box and revise the text in the proposed Method 202 to require purging in a clean environment without the need for a meter box. Three commenters added that allowing the dry gas meter to be disconnected from the sampling train would decrease the delay between tests (*i.e.,* the dry gas meter could be used with a new sampling train while the purge is being conducted on the previous train). Three commenters also stated that requiring the dry gas meter to be connected to the sampling train during the purge will force testing contractors to bring extra equipment (*e.g.,* sampling trains, dry gas meters) to the sampling site.

Three commenters suggested that the purge should be conducted at the sample recovery location (*e.g.,* mobile laboratory) rather than at the actual sampling location (*e.g.,* roof, stack sampling platform). Two commenters noted that it is not practical to haul nitrogen cylinders to the sampling location. One commenter suggested that, after the final leak check, the open ends of the impinger train could be capped during transport to the sample recovery area to reduce the possibility of oxygen contamination. The commenter noted that the sample would not be exposed to any more air than when immediately connecting to the nitrogen purge line.

Several commenters suggested that the proposed method be revised to allow testing contractors to conduct a positive-pressure purge instead of a negative-pressure purge using the dry gas meter. One commenter suggested that the purge gas flow rate be monitored by a rotameter instead of using the dry gas meter. The commenter noted that the flow rate is better regulated upstream of the impingers rather than downstream by the dry gas meter and using the rotameter to regulate the purge gas flow rate would reduce the potential for pressurizing the sampling train. Another commenter expressed concerns that if the vacuum drawn by the dry gas meter does not match the pressure from the nitrogen tank, then the impingers could become over-pressurized which could compromise the integrity of the sampling train components.

One commenter recommended that the proposed testing protocol be modified to allow the tester to disassemble the impinger train to measure for moisture content prior to conducting the required nitrogen purge. One commenter noted that weighing the impingers prior to the nitrogen purge would provide a more accurate moisture catch determination and the need to measure the amount of degassed deionized water that is added (if any) would be eliminated. Three commenters added that, if the moisture content of the impingers is determined before the nitrogen purge, then testing contractors should be allowed to purge only the knock-out impinger, backup impinger, CPM filter, and first moisture trap impinger. One commenter stated that if the sampling train is purged by pushing nitrogen through the sampling train (*i.e.,* positive pressure purge), then the sampling train components after the CPM filter thermocouple could be disconnected from the train before beginning the purge. One commenter suggested that the purge be conducted through a Teflon® tube inserted through a stopper into the impinger arm and then into the liquid to avoid compounding errors associated with adding water to the first impinger (if needed). The commenter stated that this would alleviate the need to break the fitting or add water, and prevent the potentially compounding error of water addition. Another commenter requested that a Teflon® line be inserted down and through the short-stem impinger extending below the water level in the impinger catch. The commenter stated that this would reduce the potential for breaking glassware and contamination when removing/inserting glassware stems.

Three commenters suggested that the nitrogen purge requirements be revised to allow for any liquid collected in the first (drop-out) impinger to be transferred to the second (backup) impinger. The commenters noted that this approach would decrease the potential for contamination because a new piece of glassware (the long-stem impinger) would not be introduced into the sampling train. One commenter recommended that, after the liquid is transferred to the second impinger, the first impinger should be removed from the sampling train prior to the purge.

Response: It was our intent in the proposed Method 202 to allow testing contractors the option of conducting either a pressurized purge (i.e., without the dry gas meter box and pump attached to the sampling train) or a vacuum purge (i.e., with the dry gas meter box attached to the sampling train). However, we acknowledge that the language in Section 8.5.3 and the sampling train depicted in Figure 2 of the proposed method were unclear. Consequently, we have revised Section 8.5.3 and Figure 2 and added Figure 3 to the final method to clarify that a pressurized purge is an acceptable alternative.

With regard to the commenters' suggestion to allow testing contractors to conduct the nitrogen purge at the sample recovery location instead of at the sampling location, we continue to believe that testing contractors should have the flexibility to conduct the nitrogen purge at the location of their choosing; therefore, the final method does not specify where the purge must be conducted. However, testing contractors should conduct the purge as soon as practicable after the post-test leak check to reduce the potential for artifact formation in the impinger water.

With regard to the alternative sampling train configuration for the purge, we agree with the commenters that testing contractors should be allowed the option of determining the amount of moisture collected prior to conducting the nitrogen purge, transferring any water collected prior to the CPM filter to the second impinger, and performing the nitrogen purge on the second impinger and the CPM filter only. Therefore, Section 8.5.3.2 of the final method contains an alternative purge procedure.

We disagree with the commenter's suggestion to insert a Teflon® tube into the first impinger for conducting the nitrogen purge. Using the configuration suggested by the commenters, there is no provision to maintain the temperature of the purge gas. Consequently, we believe that a Teflon® or other inert line used to purge the CPM train is not an acceptable alternative. Therefore, we are not revising Section 8.5.3.2 to allow the use of a Teflon® tube.

C. Conditional Test Method 039 (Dilution Method)

Comment: Several commenters urged EPA to continue the development of dilution-based test methods for measuring $PM_{2.5}$. One commenter supported EPA's work through the stakeholder process to decrease and eliminate other pollutant interferences

that can affect the accurate measurement of emissions of fine particles, particularly for wet stacks and high volume/low concentration gas streams. Another commenter encouraged EPA to use the stakeholder process, similar to that used for Methods 201A and 202, to move towards the promulgation of dilution methods and other test methods that can better measure emissions from high-temperature and high-moisture sources.

One commenter asserted that dilution methods more correctly simulate the atmospheric process leading to the formation and deposition of PM in the atmosphere. Another commenter expected that EPA's evaluation of an air dilution method would show that it is even more useful in accurately measuring direct $PM_{2.5}$ filterable and condensable data for high temperature sources than the revised Methods 201A and 202.

Response: EPA continues to evaluate the precision and bias of $PM_{2.5}$ collected using dilution methods. In addition to EPA's hardware design, several other hardware designs have been proposed that utilize dilution. While limited evaluations of EPA's hardware design have been performed, the other hardware designs proposed have more limited evaluations. The consensus standards body, ASTM International, has embarked on preparation of a standard method for dilution sampling of particulate material. We will continue to evaluate dilution method procedures and support the efforts of the ASTM International in their development of a standard dilution-based test method for sampling PM. In addition to these development efforts, several other factors influence EPA's decision to delay proposing a dilution based sampling method. One factor is that there is no widely accepted dilution method available at this time. Another factor is that the available dilution sampling hardware configurations share few of the equipment used by any of the existing sampling methods. As a result, testing contractors would be required to invest in this new equipment. This capital investment would require a higher charge for testing than for the existing methods. In addition, since dilution sampling is somewhat more complex, contractors are likely to initially charge a premium for this more complex testing. Lastly, the availability of hardware and experienced individuals to perform dilution sampling is extremely limited. EPA recognizes that there are limited applications where dilution sampling provides advantages over the standard test methods. As a result, we encourage sources that encounter these situations to request that the regulatory authority that established the requirement to use this method to approve the use of dilution sampling as an alternative to the test method specified for determining compliance.

Comment: One commenter maintained that use of a test method to define what constitutes CPM for all sources is neither necessary, nor (in some cases) useful. For sources, like coal-fired boilers, where the only true condensable sulfate specie from coal combustion is sulfuric acid, the commenter stated that CPM could be better quantified by direct measurement using the Controlled Condensation Method (CCM). The commenter said that States should be allowed and, in the case of units with wet scrubbers, encouraged to use such direct measurements like CCM to quantify known CPM instead of using Method 202. According to the commenter, if the use of CCM is not allowed, Method 202 should include a procedure that allows sources to correct Method 202 results using results from simultaneous CCM test runs. In this procedure, according to the commenter, the source would be subtracting out essentially the same units of sulfate from Method 202 as would be added back in from the CCM results. If, on the other hand, sulfate artifacts do exist, the commenter said that the source would be subtracting "x" units of sulfate from Method 202 and adding back "y" units of sulfate from CCM to get an accurate measurement.

Response: While SO_3 may be the most abundant CPM emitted from coal fired combustion, there is indication that other compounds comprise CPM. Few speciation tests of coal and oil combustion have been preformed, but those that have indicate the presence of not only sulfate but also chloride, nitrate, ammonium ion, and a range of inorganic elements that are potentially components for CPM (including phosphorous, arsenic, and selenium). In addition, speciation tests have been able to identify components representing only about 60 percent of the mass. Therefore, the specific correction for sulfuric acid from coal combustion source emissions proposed by the commenter would add to the complexity of the method for all source categories while providing an advantage to only one specific source category.

EPA continues to review methods that involve controlled condensation for sulfuric acid. Because no standard method is available for controlled condensate measurement of sulfuric acid, we have determined that providing additional guidance or correction of Method 202 results is premature. EPA is following current efforts by ASTM International to develop a standard controlled condensate method for sulfuric acid. In the meantime, testers and facilities should petition their regulatory authority to approve alternative data treatment for specific sources.

VI. Statutory and Executive Order Reviews

A. Executive Order 12866: Regulatory Planning and Review

This action is not a "significant regulatory action" under the terms of Executive Order (EO) 12866 (58 FR 51735, October 4, 1993) and is, therefore, not subject to review under the EO.

B. Paperwork Reduction Act

This action does not impose an information collection burden under the provisions of the *Paperwork Reduction Act,* 44 U.S.C. 3501 *et seq.* Burden is defined at 5 CFR 1320.3(b). The final amendments do not contain any reporting or recordkeeping requirements. The final amendments revise two existing source test methods to allow one method to perform additional particle sizing at 2.5 μm and to improve the precision and accuracy of the other test method.

C. Regulatory Flexibility Act

The Regulatory Flexibility Act (RFA) generally requires an agency to prepare a regulatory flexibility analysis of any rule subject to notice and comment rulemaking requirements under the Administrative Procedure Act or any other statute unless the agency certifies that the rule will not have a significant economic impact on a substantial number of small entities. Small entities include small businesses, small organizations, and small governmental jurisdictions.

For purposes of assessing the impacts of this rule on small entities, small entity is defined as: (1) A small business as defined by the Small Business Administration's (SBA) regulations at 13 CFR 121.201; (2) a small governmental jurisdiction that is a government of a city, county, town, school district or special district with a population of less than 50,000; and (3) a small organization that is any not-for-profit enterprise which is independently owned and operated and is not dominant in its field.

After considering the economic impacts of this final rule on small entities, I certify that this action will not have a significant economic impact on

a substantial number of small entities. This final rule will not impose any requirements on small entities. Most of the emission sources that will be required by State regulatory agencies (and federal regulators after 2011) to conduct tests using the revised methods are those that have PM emissions of 100 tons per year or more. EPA expects that few, if any, of these emission sources will be small entities.

Although this final action will not have a significant economic impact on a substantial number of small entities, EPA nonetheless has tried to reduce the impact of this final action on small entities. This final rule does not require any entities to use these final test methods. Such a requirement would be mandated by a separate independent regulatory action. However, upon promulgation of this final action, some entities may be required to use these test methods as a result of existing permits or regulations. Since the cost to use the final test methods is comparable to the cost of the methods they replace, little or no significant economic impact to small entities will accompany the increased precision and accuracy of the final test methods. After January 1, 2011, when the transition period established in the Clean Air Fine Particle Implementation Rule expires, States are required to consider inclusion of pollutants measured by these test methods in new or revised regulations. The economic impacts caused by any new or revised State regulations for fine PM would be associated with those State rules and not with this final action to modify the existing test methods. Consequently, we believe that this final action imposes little if any adverse economic impact to small entities.

D. Unfunded Mandates Reform Act

This rule contains no federal mandates under the provisions of Title II of the Unfunded Mandates Reform Act of 1995 (UMRA), 2 U.S.C. 1531–1538 for State, local, and tribal governments or the private sector. The incremental costs associated with conducting the revised test methods (expected to be less than $1,000 per test) do not impose a significant burden on sources. Thus, this final action is not subject to the requirements of sections 202 and 205 of the UMRA.

This rule is also not subject to the requirements of section 203 of UMRA because it contains no regulatory requirements that might significantly or uniquely affect small governments. The low incremental cost associated with the revised test methods mitigates any significant or unique effects on small governments.

E. Executive Order 13132: Federalism

This action does not have federalism implications. It will not have substantial direct effects on the States, on the relationship between the national government and the States, or on the distribution of power and responsibilities among the various levels of government, as specified in Executive Order 13132. In cases where a source of $PM_{2.5}$ emissions is owned by a State or local government, those governments may incur minimal compliance costs associated with conducting tests to quantify $PM_{2.5}$ emissions using the revised methods when they are promulgated. However, such tests would be conducted at the discretion of the State or local government and the compliance costs are not expected to impose a significant burden on those governments. Additionally, the decision to review or modify existing operating permits to reflect the CPM measurement capabilities of the final test methods is at the discretion of State and local governments and any effects or costs arising from such actions are not required by this rule. Thus, Executive Order 13132 does not apply to this action.

F. Executive Order 13175: Consultation and Coordination With Indian Tribal Governments

This action does not have tribal implications, as specified in Executive Order 13175 (65 FR 67249, November 9, 2000). In cases where a source of $PM_{2.5}$ emissions is owned by a tribal government, those governments may incur minimal compliance costs associated with conducting tests to quantify $PM_{2.5}$ emissions using the revised methods when they are promulgated. However, such tests would be conducted at the discretion of the tribal government and the compliance costs are not expected to impose a significant burden on those governments. Thus, Executive Order 13175 does not apply to this action.

G. Executive Order 13045: Protection of Children From Environmental Health and Safety Risks

EPA interprets Executive Order 13045 (62 FR 19885, April 23, 1997) as applying only to those regulatory actions that concern health or safety risks, such that the analysis required under section 5–501 of the Executive Order has the potential to influence the regulation. This action is not subject to Executive Order 13045 because it does not establish an environmental standard intended to mitigate health or safety risks.

H. Executive Order 13211: Actions Concerning Regulations That Significantly Affect Energy Supply, Distribution, or Use

This action is not subject to Executive Order 13211 (66 FR 28355, May 22, 2001) because it is not a significant regulatory action under Executive Order 12866.

I. National Technology Transfer and Advancement Act

Section 12(d) of the National Technology Transfer and Advancement Act of 1995 (NTTAA), Public Law 104–113, 12(d) (15 U.S.C. 272 note) directs EPA to use voluntary consensus standards in its regulatory activities unless to do so would be inconsistent with applicable law or otherwise impractical. Voluntary consensus standards are technical standards (*e.g.,* materials specifications, test methods, sampling procedures, and business practices) that are developed or adopted by voluntary consensus standards bodies. NTTAA directs EPA to provide Congress, through OMB, explanations when the Agency decides not to use available and applicable voluntary consensus standards.

This action involves technical standards. EPA has decided to use two voluntary consensus standards that were identified at proposal to be applicable for use within the amended test methods. The first voluntary consensus standard cited in proposed Method 202 was ASTM International Method D2986–95a (1999), "Standard Method for Evaluation of Air, Assay Media by the Monodisperse DOP (Dioctyl Phthalate) Smoke Test," for its procedures to conduct filter efficiency tests. In the final Method 202, we replaced the prescriptive requirement to use a filter meeting ASTM International D2986–95a (1999) with a performance-based requirement limiting the residual mass contribution. The performance based approach specifies that the CPM filter must be a non-reactive, non-disintegrating filter that does not contribute more than 0.5 mg of residual mass to the CPM measurements. Regarding efficiency, the CPM filter must have an efficiency of at least 99.95 percent (< 0.05 percent penetration) on 0.3 μm particles.

The second voluntary consensus standard cited in proposed Method 202 was ASTM International D1193–06, "Standard Specification for Reagent Water," for the proper selection of distilled ultra-filtered water. In response to public comments, we applied a

performance-based approach in the final Method 202 that requires deionized, ultra-filtered water that contains 1.0 ppmw (1 mg/L) residual mass or less.

J. Executive Order 12898: Federal Actions To Address Environmental Justice in Minority Populations and Low-Income Populations

Executive Order 12898 (59 FR 7629, February 16, 1994) establishes federal executive policy on environmental justice. Its main provision directs federal agencies, to the greatest extent practicable and permitted by law, to make environmental justice part of their mission by identifying and addressing, as appropriate, disproportionately high and adverse human health or environmental effects of their programs, policies, and activities on minority populations and low-income populations in the United States.

EPA has determined that this final rule will not have disproportionately high and adverse human health or environmental effects on minority or low-income populations because it increases the level of environmental protection for all affected populations without having any disproportionately high and adverse human health or environmental effects on any population, including any minority or low-income population. The final amendments revise existing test methods to improve the accuracies of the measurements that are expected to improve environmental quality and reduce health risks for areas that may be designated as nonattainment.

K. Congressional Review Act

The Congressional Review Act, 5 U.S.C. 801 *et seq.,* as added by the Small Business Regulatory Enforcement Fairness Act of 1996, generally provides that before a rule may take effect, the agency promulgating the rule must submit a rule report, which includes a copy of the rule, to each House of the Congress and to the Comptroller General of the United States. Section 808 allows the issuing agency to make a rule effective sooner than otherwise provided by the CRA if the agency makes a good cause finding that notice and public procedure is impracticable, unnecessary or contrary to the public interest. This determination must be supported by a brief statement. 5 U.S.C. 808(2). As stated previously, EPA has made such a good cause finding, including the reasons therefore, and established an effective date of January 1, 2011 (see section I.C, supra). EPA will submit a report containing this rule and other required information to the U.S. Senate, the U.S. House of Representatives, and the Comptroller General of the United States prior to publication of the rule in the **Federal Register**. This action is not a "major rule" as defined by 5 U.S.C. 804(2).

List of Subjects in 40 CFR Part 51

Administrative practice and procedure, Air pollution control, Carbon monoxide, Intergovernmental relations, Lead, Nitrogen oxide, Ozone, PM, Reporting and recordkeeping requirements, Sulfur compounds, Volatile organic compounds.

Dated: December 1, 2010.

Lisa P. Jackson,

Administrator.

■ For the reasons stated in the preamble, title 40, chapter I of the Code of Federal Regulations is amended as follows:

PART 51—[AMENDED]

■ 1. The authority citation for part 51 continues to read as follows:

Authority: 23 U.S.C. 101; 42 U.S.C 7401–7671q.

■ 2. Amend appendix M by revising Methods 201A and 202 to read as follows:

Appendix M to Part 51—Recommended Test Methods for State Implementation Plans

* * * * *

METHOD 201A—DETERMINATION OF PM_{10} AND $PM_{2.5}$ EMISSIONS FROM STATIONARY SOURCES (Constant Sampling Rate Procedure)

1.0 Scope and Applicability

1.1 Scope. The U.S. Environmental Protection Agency (U.S. EPA or "we") developed this method to describe the procedures that the stack tester ("you") must follow to measure filterable particulate matter (PM) emissions equal to or less than a nominal aerodynamic diameter of 10 micrometers (PM_{10}) and 2.5 micrometers ($PM_{2.5}$). This method can be used to measure coarse particles (i.e., the difference between the measured PM_{10} concentration and the measured $PM_{2.5}$ concentration).

1.2 Applicability. This method addresses the equipment, preparation, and analysis necessary to measure filterable PM. You can use this method to measure filterable PM from stationary sources only. Filterable PM is collected in stack with this method (i.e., the method measures materials that are solid or liquid at stack conditions). If the gas filtration temperature exceeds 30 °C (85 °F), then you may use the procedures in this method to measure only filterable PM (material that does not pass through a filter or a cyclone/filter combination). If the gas filtration temperature exceeds 30 °C (85 °F), and you must measure both the filterable and condensable (material that condenses after passing through a filter) components of total primary (direct) PM emissions to the atmosphere, then you must combine the procedures in this method with the procedures in Method 202 of appendix M to this part for measuring condensable PM. However, if the gas filtration temperature never exceeds 30 °C (85 °F), then use of Method 202 of appendix M to this part is not required to measure total primary PM.

1.3 Responsibility. You are responsible for obtaining the equipment and supplies you will need to use this method. You must also develop your own procedures for following this method and any additional procedures to ensure accurate sampling and analytical measurements.

1.4 Additional Methods. To obtain results, you must have a thorough knowledge of the following test methods found in appendices A–1 through A–3 of 40 CFR part 60:

(a) Method 1—Sample and velocity traverses for stationary sources.

(b) Method 2—Determination of stack gas velocity and volumetric flow rate (Type S pitot tube).

(c) Method 3—Gas analysis for the determination of dry molecular weight.

(d) Method 4—Determination of moisture content in stack gases.

(e) Method 5—Determination of particulate matter emissions from stationary sources.

1.5 Limitations. You cannot use this method to measure emissions in which water droplets are present because the size separation of the water droplets may not be representative of the dry particle size released into the air. To measure filterable PM_{10} and $PM_{2.5}$ in emissions where water droplets are known to exist, we recommend that you use Method 5 of appendix A–3 to part 60. Because of the temperature limit of the O-rings used in this sampling train, you must follow the procedures in Section 8.6.1 to test emissions from stack gas temperatures exceeding 205 °C (400 °F).

1.6 Conditions. You can use this method to obtain particle sizing at 10 micrometers and or 2.5 micrometers if you sample within 80 and 120 percent of isokinetic flow. You can also use this method to obtain total filterable particulate if you sample within 90 to 110 percent of isokinetic flow, the number of sampling points is the same as required by Method 5 of appendix A–3 to part 60 or Method 17 of appendix A–6 to part 60, and the filter temperature is within an acceptable range for these methods. For Method 5, the acceptable range for the filter temperature is generally 120 °C (248 °F) unless a higher or lower temperature is specified. The acceptable range varies depending on the source, control technology and applicable rule or permit condition. To satisfy Method 5 criteria, you may need to remove the in-stack filter and use an out-of-stack filter and recover the PM in the probe between the $PM_{2.5}$ particle sizer and the filter. In addition, to satisfy Method 5 and Method 17 criteria, you may need to sample from more than 12 traverse points. Be aware that this method determines in-stack PM_{10} and $PM_{2.5}$ filterable emissions by sampling from a recommended maximum of 12 sample points, at a constant flow rate through the train (the constant flow is necessary to maintain the size cuts of the cyclones), and with a filter that is at the stack

temperature. In contrast, Method 5 or Method 17 trains are operated isokinetically with varying flow rates through the train. Method 5 and Method 17 require sampling from as many as 24 sample points. Method 5 uses an out-of-stack filter that is maintained at a constant temperature of 120 °C (248 °F). Further, to use this method in place of Method 5 or Method 17, you must extend the sampling time so that you collect the minimum mass necessary for weighing each portion of this sampling train. Also, if you are using this method as an alternative to a test method specified in a regulatory requirement (e.g., a requirement to conduct a compliance or performance test), then you must receive approval from the authority that established the regulatory requirement before you conduct the test.

2.0 Summary of Method

2.1 Summary. To measure PM_{10} and $PM_{2.5}$, extract a sample of gas at a predetermined constant flow rate through an in-stack sizing device. The particle-sizing device separates particles with nominal aerodynamic diameters of 10 micrometers and 2.5 micrometers. To minimize variations in the isokinetic sampling conditions, you must establish well-defined limits. After a sample is obtained, remove uncombined water from the particulate, then use gravimetric analysis to determine the particulate mass for each size fraction. The original method, as promulgated in 1990, has been changed by adding a $PM_{2.5}$ cyclone downstream of the PM_{10} cyclone. Both cyclones were developed and evaluated as part of a conventional five-stage cascade cyclone train. The addition of a $PM_{2.5}$ cyclone between the PM_{10} cyclone and the stack temperature filter in the sampling train supplements the measurement of PM_{10} with the measurement of $PM_{2.5}$. Without the addition of the $PM_{2.5}$ cyclone, the filterable particulate portion of the sampling train may be used to measure total and PM_{10} emissions. Likewise, with the exclusion of the PM_{10} cyclone, the filterable particulate portion of the sampling train may be used to measure total and $PM_{2.5}$ emissions. Figure 1 of Section 17 presents the schematic of the sampling train configured with this change.

3.0 Definitions

3.1 *Condensable particulate matter (CPM)* means material that is vapor phase at stack conditions, but condenses and/or reacts upon cooling and dilution in the ambient air to form solid or liquid PM immediately after discharge from the stack. Note that all CPM is assumed to be in the $PM_{2.5}$ size fraction.

3.2 *Constant weight* means a difference of no more than 0.5 mg or one percent of total weight less tare weight, whichever is greater, between two consecutive weighings, with no less than six hours of desiccation time between weighings.

3.3 *Filterable particulate matter (PM)* means particles that are emitted directly by a source as a solid or liquid at stack or release conditions and captured on the filter of a stack test train.

3.4 *Primary particulate matter (PM)* (also known as direct PM) means particles that enter the atmosphere as a direct emission from a stack or an open source. Primary PM has two components: Filterable PM and condensable PM. These two PM components have no upper particle size limit.

3.5 *Primary $PM_{2.5}$* (also known as direct $PM_{2.5}$, total $PM_{2.5}$, $PM_{2.5}$, or combined filterable $PM_{2.5}$ and condensable PM) means PM with an aerodynamic diameter less than or equal to 2.5 micrometers. These solid particles are emitted directly from an air emissions source or activity, or are the gaseous or vaporous emissions from an air emissions source or activity that condense to form PM at ambient temperatures. Direct $PM_{2.5}$ emissions include elemental carbon, directly emitted organic carbon, directly emitted sulfate, directly emitted nitrate, and other inorganic particles (including but not limited to crustal material, metals, and sea salt).

3.6 *Primary PM_{10}* (also known as direct PM_{10}, total PM_{10}, PM_{10}, or the combination of filterable PM_{10} and condensable PM) means PM with an aerodynamic diameter equal to or less than 10 micrometers.

4.0 Interferences

You cannot use this method to measure emissions where water droplets are present because the size separation of the water droplets may not be representative of the dry particle size released into the air. Stacks with entrained moisture droplets may have water droplets larger than the cut sizes for the cyclones. These water droplets normally contain particles and dissolved solids that become PM_{10} and $PM_{2.5}$ following evaporation of the water.

5.0 Safety

5.1 Disclaimer. Because the performance of this method may require the use of hazardous materials, operations, and equipment, you should develop a health and safety plan to ensure the safety of your employees who are on site conducting the particulate emission test. Your plan should conform with all applicable Occupational Safety and Health Administration, Mine Safety and Health Administration, and Department of Transportation regulatory requirements. Because of the unique situations at some facilities and because some facilities may have more stringent requirements than is required by State or federal laws, you may have to develop procedures to conform to the plant health and safety requirements.

6.0 Equipment and Supplies

Figure 2 of Section 17 shows details of the combined cyclone heads used in this method. The sampling train is the same as Method 17 of appendix A–6 to part 60 with the exception of the PM_{10} and $PM_{2.5}$ sizing devices. The following sections describe the sampling train's primary design features in detail.

6.1 Filterable Particulate Sampling Train Components.

6.1.1 Nozzle. You must use stainless steel (316 or equivalent) or fluoropolymer-coated stainless steel nozzles with a sharp tapered leading edge. We recommend one of the 12 nozzles listed in Figure 3 of Section 17 because they meet design specifications when PM_{10} cyclones are used as part of the sampling train. We also recommend that you have a large number of nozzles in small diameter increments available to increase the likelihood of using a single nozzle for the entire traverse. We recommend one of the nozzles listed in Figure 4A or 4B of Section 17 because they meet design specifications when $PM_{2.5}$ cyclones are used without PM_{10} cyclones as part of the sampling train.

6.1.2 PM_{10} and $PM_{2.5}$ Sizing Device.

6.1.2.1 Use stainless steel (316 or equivalent) or fluoropolymer-coated PM_{10} and $PM_{2.5}$ sizing devices. You may use sizing devices constructed of high-temperature specialty metals such as Inconel, Hastelloy, or Haynes 230. (See also Section 8.6.1.) The sizing devices must be cyclones that meet the design specifications shown in Figures 3, 4A, 4B, 5, and 6 of Section 17. Use a caliper to verify that the dimensions of the PM_{10} and $PM_{2.5}$ sizing devices are within ± 0.02 cm of the design specifications. Example suppliers of PM_{10} and $PM_{2.5}$ sizing devices include the following:

(a) Environmental Supply Company, Inc., 2142 E. Geer Street, Durham, North Carolina 27704. Telephone No.: (919) 956–9688; Fax: (919) 682–0333.

(b) Apex Instruments, 204 Technology Park Lane, Fuquay-Varina, North Carolina 27526. Telephone No.: (919) 557–7300 (phone); Fax: (919) 557–7110.

6.1.2.2 You may use alternative particle sizing devices if they meet the requirements in Development and Laboratory Evaluation of a Five-Stage Cyclone System, EPA–600/7–78–008 (*http://cfpub.epa.gov/ols*).

6.1.3 Filter Holder. Use a filter holder that is stainless steel (316 or equivalent). A heated glass filter holder may be substituted for the steel filter holder when filtration is performed out-of-stack. Commercial-size filter holders are available depending upon project requirements, including commercial stainless steel filter holders to support 25-, 47-, 63-, 76-, 90-, 101-, and 110-mm diameter filters. Commercial size filter holders contain a fluoropolymer O-ring, a stainless steel screen that supports the particulate filter, and a final fluoropolymer O-ring. Screw the assembly together and attach to the outlet of cyclone IV. The filter must not be compressed between the fluoropolymer O-ring and the filter housing.

6.1.4 Pitot Tube. You must use a pitot tube made of heat resistant tubing. Attach the pitot tube to the probe with stainless steel fittings. Follow the specifications for the pitot tube and its orientation to the inlet nozzle given in Section 6.1.1.3 of Method 5 of appendix A–3 to part 60.

6.1.5 Probe Extension and Liner. The probe extension must be glass- or fluoropolymer-lined. Follow the specifications in Section 6.1.1.2 of Method 5 of appendix A–3 to part 60. If the gas filtration temperature never exceeds 30 °C (85 °F), then the probe may be constructed of stainless steel without a probe liner and the extension is not recovered as part of the PM.

6.1.6 Differential Pressure Gauge, Condensers, Metering Systems, Barometer, and Gas Density Determination Equipment. Follow the requirements in Sections 6.1.1.4

through 6.1.3 of Method 5 of appendix A–3 to part 60, as applicable.

6.2 Sample Recovery Equipment.

6.2.1 Filterable Particulate Recovery. Use the following equipment to quantitatively determine the amount of filterable PM recovered from the sampling train.

(a) Cyclone and filter holder brushes.

(b) Wash bottles. Two wash bottles are recommended. Any container material is acceptable, but wash bottles used for sample and blank recovery must not contribute more than 0.1 mg of residual mass to the CPM measurements.

(c) Leak-proof sample containers. Containers used for sample and blank recovery must not contribute more than 0.05 mg of residual mass to the CPM measurements.

(d) Petri dishes. For filter samples; glass or polyethylene, unless otherwise specified by the Administrator.

(e) Graduated cylinders. To measure condensed water to within 1 ml or 0.5 g. Graduated cylinders must have subdivisions not greater than 2 ml.

(f) Plastic storage containers. Air-tight containers to store silica gel.

6.2.2 Analysis Equipment.

(a) Funnel. Glass or polyethylene, to aid in sample recovery.

(b) Rubber policeman. To aid in transfer of silica gel to container; not necessary if silica gel is weighed in the field.

(c) Analytical balance. Analytical balance capable of weighing at least 0.0001 g (0.1 mg).

(d) Balance. To determine the weight of the moisture in the sampling train components, use an analytical balance accurate to ± 0.5 g.

(e) Fluoropolymer beaker liners.

7.0 Reagents, Standards, and Sampling Media

7.1 Sample Collection. To collect a sample, you will need a filter and silica gel. You must also have water and crushed ice. These items must meet the following specifications.

7.1.1 Filter. Use a nonreactive, nondisintegrating glass fiber, quartz, or polymer filter that does not a have an organic binder. The filter must also have an efficiency of at least 99.95 percent (less than 0.05 percent penetration) on 0.3 micrometer dioctyl phthalate particles. You may use test data from the supplier's quality control program to document the PM filter efficiency.

7.1.2 Silica Gel. Use an indicating-type silica gel of 6 to 16 mesh. You must obtain approval from the regulatory authority that established the requirement to use this test method to use other types of desiccants (equivalent or better) before you use them. Allow the silica gel to dry for two hours at 175 °C (350 °F) if it is being reused. You do not have to dry new silica gel if the indicator shows the silica is active for moisture collection.

7.1.3 Crushed Ice. Obtain from the best readily available source.

7.1.4 Water. Use deionized, ultra-filtered water that contains 1.0 part per million by weight (1 milligram/liter) residual mass or less to recover and extract samples.

7.2 Sample Recovery and Analytical Reagents. You will need acetone and anhydrous calcium sulfate for the sample recovery and analysis. Unless otherwise indicated, all reagents must conform to the specifications established by the Committee on Analytical Reagents of the American Chemical Society. If such specifications are not available, then use the best available grade. Additional information on each of these items is in the following paragraphs.

7.2.1 Acetone. Use acetone that is stored in a glass bottle. Do not use acetone from a metal container because it will likely produce a high residue in the laboratory and field reagent blanks. You must use acetone with blank values less than 1 part per million by weight residue. Analyze acetone blanks prior to field use to confirm low blank values. In no case shall a blank value of greater than 0.0001 percent (1 part per million by weight) of the weight of acetone used in sample recovery be subtracted from the sample weight (i.e., the maximum blank correction is 0.1 mg per 100 ml of acetone used to recover samples).

7.2.2 Particulate Sample Desiccant. Use indicating-type anhydrous calcium sulfate to desiccate samples prior to weighing.

8.0 Sample Collection, Preservation, Storage, and Transport

8.1 Qualifications. This is a complex test method. To obtain reliable results, you should be trained and experienced with in-stack filtration systems (such as cyclones, impactors, and thimbles) and impinger and moisture train systems.

8.2 Preparations. Follow the pretest preparation instructions in Section 8.1 of Method 5 of appendix A–3 to part 60.

8.3 Site Setup. You must complete the following to properly set up for this test:

(a) Determine the sampling site location and traverse points.

(b) Calculate probe/cyclone blockage.

(c) Verify the absence of cyclonic flow.

(d) Complete a preliminary velocity profile and select a nozzle(s) and sampling rate.

8.3.1 Sampling Site Location and Traverse Point Determination. Follow the standard procedures in Method 1 of appendix A–1 to part 60 to select the appropriate sampling site. Choose a location that maximizes the distance from upstream and downstream flow disturbances.

(a) Traverse points. The required maximum number of total traverse points at any location is 12, as shown in Figure 7 of Section 17. You must prevent the disturbance and capture of any solids accumulated on the inner wall surfaces by maintaining a 1-inch distance from the stack wall (0.5 inch for sampling locations less than 36.4 inches in diameter with the pitot tube and 32.4 inches without the pitot tube). During sampling, when the $PM_{2.5}$ cyclone is used without the PM_{10}, traverse points closest to the stack walls may not be reached because the inlet to a $PM_{2.5}$ cyclone is located approximately 2.75 inches from the end of the cyclone. For these cases, you may collect samples using the procedures in Section 11.3.2.2 of Method 1 of appendix A–3 to part 60. You must use the traverse point closest to the unreachable sampling points as replacement for the unreachable points. You must extend the sampling time at the replacement sampling point to include the duration of the unreachable traverse points.

(b) Round or rectangular duct or stack. If a duct or stack is round with two ports located 90° apart, use six sampling points on each diameter. Use a 3x4 sampling point layout for rectangular ducts or stacks. Consult with the Administrator to receive approval for other layouts before you use them.

(c) Sampling ports. You must determine if the sampling ports can accommodate the in-stack cyclones used in this method. You may need larger diameter sampling ports than those used by Method 5 of appendix A–3 to part 60 or Method 17 of appendix A–6 to part 60 for total filterable particulate sampling. When you use nozzles smaller than 0.16 inch in diameter and either a PM_{10} or a combined PM_{10} and $PM_{2.5}$ sampling apparatus, the sampling port diameter may need to be six inches in diameter to accommodate the entire apparatus because the conventional 4-inch diameter port may be too small due to the combined dimension of the PM_{10} cyclone and the nozzle extending from the cyclone, which will likely exceed the internal diameter of the port. A 4-inch port should be adequate for the single $PM_{2.5}$ sampling apparatus. However, do not use the conventional 4-inch diameter port in any circumstances in which the combined dimension of the cyclone and the nozzle extending from the cyclone exceeds the internal diameter of the port. (**Note:** If the port nipple is short, you may be able to "hook" the sampling head through a smaller port into the duct or stack.)

8.3.2 Probe/Cyclone Blockage Calculations. Follow the procedures in the next two sections, as appropriate.

8.3.2.1 *Ducts with diameters greater than 36.4 inches.* Based on commercially available cyclone assemblies for this procedure, ducts with diameters greater than 36.4 inches have blockage effects less than three percent, as illustrated in Figure 8 of Section 17. You must minimize the blockage effects of the combination of the in-stack nozzle/cyclones, pitot tube, and filter assembly that you use by keeping the cross-sectional area of the assembly at three percent or less of the cross-sectional area of the duct.

8.3.2.2 *Ducts with diameters between 25.7 and 36.4 inches.* Ducts with diameters between 25.7 and 36.4 inches have blockage effects ranging from three to six percent, as illustrated in Figure 8 of Section 17. Therefore, when you conduct tests on these small ducts, you must adjust the observed velocity pressures for the estimated blockage factor whenever the combined sampling apparatus blocks more than three percent of the stack or duct (*see* Sections 8.7.2.2 and 8.7.2.3 on the probe blockage factor and the final adjusted velocity pressure, respectively). (**Note:** Valid sampling with the combined $PM_{2.5}/PM_{10}$ cyclones cannot be performed with this method if the average stack blockage from the sampling assembly is greater than six percent, i.e., the stack diameter is less than 26.5 inches.)

8.3.3 Cyclonic Flow. Do not use the combined cyclone sampling head at sampling locations subject to cyclonic flow. Also, you must follow procedures in Method 1 of

appendix A–1 to part 60 to determine the presence or absence of cyclonic flow and then perform the following calculations:

(a) As per Section 11.4 of Method 1 of appendix A–1 to part 60, find and record the angle that has a null velocity pressure for each traverse point using an S-type pitot tube.

(b) Average the absolute values of the angles that have a null velocity pressure. Do not use the sampling location if the average absolute value exceeds 20°. (**Note:** You can minimize the effects of cyclonic flow conditions by moving the sampling location, placing gas flow straighteners upstream of the sampling location, or applying a modified sampling approach as described in EPA Guideline Document GD–008, Particulate Emissions Sampling in Cyclonic Flow. You may need to obtain an alternate method approval from the regulatory authority that established the requirement to use this test method prior to using a modified sampling approach.)

8.3.4 Preliminary Velocity Profile. Conduct a preliminary velocity traverse by following Method 2 of appendix A–1 to part 60 velocity traverse procedures. The purpose of the preliminary velocity profile is to determine all of the following:

(a) The gas sampling rate for the combined probe/cyclone sampling head in order to meet the required particle size cut.

(b) The appropriate nozzle to maintain the required gas sampling rate for the velocity pressure range and isokinetic range. If the isokinetic range cannot be met (*e.g.,* batch processes, extreme process flow or temperature variation), void the sample or use methods subject to the approval of the Administrator to correct the data. The acceptable variation from isokinetic sampling is 80 to 120 percent and no more than 100 ± 29 percent (two out of 12 or five out of 24) sampling points outside of this criteria.

(c) The necessary sampling duration to obtain sufficient particulate catch weights.

8.3.4.1 *Preliminary traverse.* You must use an S-type pitot tube with a conventional thermocouple to conduct the traverse. Conduct the preliminary traverse as close as possible to the anticipated testing time on sources that are subject to hour-by-hour gas flow rate variations of approximately ± 20 percent and/or gas temperature variations of approximately ± 10 °C (± 50 °F). (**Note:** You should be aware that these variations can cause errors in the cyclone cut diameters and the isokinetic sampling velocities.)

8.3.4.2 *Velocity pressure range.* Insert the S-type pitot tube at each traverse point and record the range of velocity pressures measured on data form in Method 2 of appendix A–1 to part 60. You will use this later to select the appropriate nozzle.

8.3.4.3 *Initial gas stream viscosity and molecular weight.* Determine the average gas temperature, average gas oxygen content, average carbon dioxide content, and estimated moisture content. You will use this information to calculate the initial gas stream viscosity (Equation 3) and molecular weight (Equations 1 and 2). (**Note:** You must follow the instructions outlined in Method 4 of appendix A–3 to part 60 or Alternative Moisture Measurement Method Midget Impingers (ALT–008) to estimate the moisture content. You may use a wet bulb-dry bulb measurement or hand-held hygrometer measurement to estimate the moisture content of sources with gas temperatures less than 71 °C (160 °F).)

8.3.4.4 *Approximate PM concentration in the gas stream.* Determine the approximate PM concentration for the $PM_{2.5}$ and the $PM_{2.5}$ to PM_{10} components of the gas stream through qualitative measurements or estimates from precious stack particulate emissions tests. Having an idea of the particulate concentration in the gas stream is not essential but will help you determine the appropriate sampling time to acquire sufficient PM weight for better accuracy at the source emission level. The collectable PM weight requirements depend primarily on the types of filter media and weighing capabilities that are available and needed to characterize the emissions. Estimate the collectable PM concentrations in the greater than 10 micrometer, less than or equal to 10 micrometers and greater than 2.5 micrometers, and less than or equal to 2.5 micrometer size ranges. Typical PM concentrations are listed in Table 1 of Section 17. Additionally, relevant sections of AP–42, Compilation of Air Pollutant Emission Factors, may contain particle size distributions for processes characterized in those sections, and appendix B2 of AP–42 contains generalized particle size distributions for nine industrial process categories (e.g., stationary internal combustion engines firing gasoline or diesel fuel, calcining of aggregate or unprocessed ores). The generalized particle size distributions can be used if source-specific particle size distributions are unavailable. Appendix B2 of AP–42 also contains typical collection efficiencies of various particulate control devices and example calculations showing how to estimate uncontrolled total particulate emissions, uncontrolled size-specific emissions, and controlled size-specific particulate emissions. (*http://www.epa.gov/ttnchie1/ap42.*)

8.4 Pre-test Calculations. You must perform pre-test calculations to help select the appropriate gas sampling rate through cyclone I (PM_{10}) and cyclone IV ($PM_{2.5}$). Choosing the appropriate sampling rate will allow you to maintain the appropriate particle cut diameters based upon preliminary gas stream measurements, as specified in Table 2 of Section 17.

8.4.1 Gas Sampling Rate. The gas sampling rate is defined by the performance curves for both cyclones, as illustrated in Figure 10 of Section 17. You must use the calculations in Section 8.5 to achieve the appropriate cut size specification for each cyclone. The optimum gas sampling rate is the overlap zone defined as the range below the cyclone IV 2.25 micrometer curve down to the cyclone I 11.0 micrometer curve (area between the two dark, solid lines in Figure 10 of Section 17).

8.4.2 Choosing the Appropriate Sampling Rate. You must select a gas sampling rate in the middle of the overlap zone (discussed in Section 8.4.1), as illustrated in Figure 10 of Section 17, to maximize the acceptable tolerance for slight variations in flow characteristics at the sampling location. The overlap zone is also a weak function of the gas composition. (**Note:** The acceptable range is limited, especially for gas streams with temperatures less than approximately 100 °F. At lower temperatures, it may be necessary to perform the PM_{10} and $PM_{2.5}$ separately in order to meet the necessary particle size criteria shown in Table 2 of Section 17.)

8.5 Test Calculations. You must perform all of the calculations in Table 3 of Section 17 and the calculations described in Sections 8.5.1 through 8.5.5.

8.5.1 Assumed Reynolds Number. You must select an assumed Reynolds number (N_{re}) using Equation 10 and an estimated sampling rate or from prior experience under the stack conditions determined using Methods 1 through 4 to part 60. You will perform initial test calculations based on an assumed N_{re} for the test to be performed. You must verify the assumed N_{re} by substituting the sampling rate (Q_s) calculated in Equation 7 into Equation 10. Then use Table 5 of Section 17 to determine if the N_{re} used in Equation 5 was correct.

8.5.2 Final Sampling Rate. Recalculate the final Q_s if the assumed N_{re} used in your initial calculation is not correct. Use Equation 7 to recalculate the optimum Q_s.

8.5.3 Meter Box ΔH. Use Equation 11 to calculate the meter box orifice pressure drop (ΔH) after you calculate the optimum sampling rate and confirm the N_{re}. (**Note:** The stack gas temperature may vary during the test, which could affect the sampling rate. If the stack gas temperature varies, you must make slight adjustments in the meter box ΔH to maintain the correct constant cut diameters. Therefore, use Equation 11 to recalculate the ΔH values for 50 °F above and below the stack temperature measured during the preliminary traverse (*see* Section 8.3.4.1), and document this information in Table 4 of Section 17.)

8.5.4 Choosing a Sampling Nozzle. Select one or more nozzle sizes to provide for near isokinetic sampling rate (see Section 1.6). This will also minimize an isokinetic sampling error for the particles at each point. First calculate the mean stack gas velocity (v_s) using Equation 13. See Section 8.7.2 for information on correcting for blockage and use of different pitot tube coefficients. Then use Equation 14 to calculate the diameter (D) of a nozzle that provides for isokinetic sampling at the mean v_s at flow Q_s. From the available nozzles one size smaller and one size larger than this diameter, D, select the most appropriate nozzle. Perform the following steps for the selected nozzle.

8.5.4.1 *Minimum/maximum nozzle/stack velocity ratio.* Use Equation 15 to determine the velocity of gas in the nozzle. Use Equation 16 to calculate the minimum nozzle/stack velocity ratio (R_{min}). Use Equation 17 to calculate the maximum nozzle/stack velocity ratio (R_{max}).

8.5.4.2 *Minimum gas velocity.* Use Equation 18 to calculate the minimum gas velocity (v_{min}) if R_{min} is an imaginary number (negative value under the square root function) or if R_{min} is less than 0.5. Use Equation 19 to calculate v_{min} if R_{min} is ≥ 0.5.

8.5.4.3 *Maximum stack velocity.* Use Equation 20 to calculate the maximum stack

velocity (v_{max}) if R_{max} is less than 1.5. Use Equation 21 to calculate the stack velocity if R_{max} is ≥ 1.5.

8.5.4.4 *Conversion of gas velocities to velocity pressure.* Use Equation 22 to convert v_{min} to minimum velocity pressure, Δp_{min}. Use Equation 23 to convert v_{max} to maximum velocity pressure, Δp_{max}.

8.5.4.5 *Comparison to observed velocity pressures.* Compare minimum and maximum velocity pressures with the observed velocity pressures at all traverse points during the preliminary test (*see* Section 8.3.4.2).

8.5.5 Optimum Sampling Nozzle. The nozzle you selected is appropriate if all the observed velocity pressures during the preliminary test fall within the range of the Δp_{min} and Δp_{max}. Make sure the following requirements are met then follow the procedures in Sections 8.5.5.1 and 8.5.5.2.

(a) Choose an optimum nozzle that provides for isokinetic sampling conditions as close to 100 percent as possible. This is prudent because even if there are slight variations in the gas flow rate, gas temperature, or gas composition during the actual test, you have the maximum assurance of satisfying the isokinetic criteria. Generally, one of the two candidate nozzles selected will be closer to optimum (*see* Section 8.5.4).

(b) When testing is for $PM_{2.5}$ only, you are allowed a 16 percent failure rate, rounded to the nearest whole number, of sampling points that are outside the range of the Δp_{min} and Δp_{max}. If the coarse fraction for PM_{10} determination is included, you are allowed only an eight percent failure rate of the sampling points, rounded to the nearest whole number, outside the Δp_{min} and Δp_{max}.

8.5.5.1 *Precheck.* Visually check the selected nozzle for dents before use.

8.5.5.2 *Attach the pre-selected nozzle.* Screw the pre-selected nozzle onto the main body of cyclone I using fluoropolymer tape. Use a union and cascade adaptor to connect the cyclone IV inlet to the outlet of cyclone I (*see* Figure 2 of Section 17).

8.6 Sampling Train Preparation. A schematic of the sampling train used in this method is shown in Figure 1 of Section 17. First, assemble the train and complete the leak check on the combined cyclone sampling head and pitot tube. Use the following procedures to prepare the sampling train. (**Note:** Do not contaminate the sampling train during preparation and assembly. Keep all openings, where contamination can occur, covered until just prior to assembly or until sampling is about to begin.)

8.6.1 Sampling Head and Pitot Tube. Assemble the combined cyclone train. The O-rings used in the train have a temperature limit of approximately 205 °C (400 °F). Use cyclones with stainless steel sealing rings for stack temperatures above 205 °C (400 °F) up to 260 °C (500 °F). You must also keep the nozzle covered to protect it from nicks and scratches. This method may not be suitable for sources with stack gas temperatures exceeding 260 °C (500 °F) because the threads of the cyclone components may gall or seize, thus preventing the recovery of the collected PM and rendering the cyclone unusable for subsequent use. You may use stainless steel cyclone assemblies constructed with bolt-together rather than screw-together assemblies at temperatures up to 538 °C (1,000 °F). You must use "break-away" or expendable stainless steel bolts that can be over-torqued and broken if necessary to release cyclone closures, thus allowing you to recover PM without damaging the cyclone flanges or contaminating the samples. You may need to use specialty metals to achieve reliable particulate mass measurements above 538 °C (1,000 °F). The method can be used at temperatures up to 1,371 °C (2,500 °F) using specially constructed high-temperature stainless steel alloys (Hastelloy or Haynes 230) with bolt-together closures using break-away bolts.

8.6.2 Filterable Particulate Filter Holder and Pitot Tube. Attach the pre-selected filter holder to the end of the combined cyclone sampling head (*see* Figure 2 of Section 17). Attach the S-type pitot tube to the combined cyclones after the sampling head is fully attached to the end of the probe. (**Note:** The pitot tube tip must be mounted slightly beyond the combined head cyclone sampling assembly and at least one inch off the gas flow path into the cyclone nozzle. This is similar to the pitot tube placement in Method 17 of appendix A–6 to part 60.) Securely fasten the sensing lines to the outside of the probe to ensure proper alignment of the pitot tube. Provide unions on the sensing lines so that you can connect and disconnect the S-type pitot tube tips from the combined cyclone sampling head before and after each run. Calibrate the pitot tube on the sampling head according to the most current ASTM International D3796 because the cyclone body is a potential source flow disturbance and will change the pitot coefficient value from the baseline (isolated tube) value.

8.6.3 Filter. You must number and tare the filters before use. To tare the filters, desiccate each filter at 20 ± 5.6 °C (68 ± 10 °F) and ambient pressure for at least 24 hours and weigh at intervals of at least six hours to a constant weight. (See Section 3.0 for a definition of constant weight.) Record results to the nearest 0.1 mg. During each weighing, the filter must not be exposed to the laboratory atmosphere for longer than two minutes and a relative humidity above 50 percent. Alternatively, the filters may be oven-dried at 104 °C (220 °F) for two to three hours, desiccated for two hours, and weighed. Use tweezers or clean disposable surgical gloves to place a labeled (identified) and pre-weighed filter in the filter holder. You must center the filter and properly place the gasket so that the sample gas stream will not circumvent the filter. The filter must not be compressed between the gasket and the filter housing. Check the filter for tears after the assembly is completed. Then screw or clamp the filter housing together to prevent the seal from leaking.

8.6.4 Moisture Trap. If you are measuring only filterable particulate (or you are sure that the gas filtration temperature will be maintained below 30 °C (85 °F)), then an empty modified Greenburg Smith impinger followed by an impinger containing silica gel is required. Alternatives described in Method 5 of appendix A–3 to part 60 may also be used to collect moisture that passes through the ambient filter. If you are measuring condensable PM in combination with this method, then follow the procedures in Method 202 of appendix M of this part for moisture collection.

8.6.5 Leak Check. Use the procedures outlined in Section 8.4 of Method 5 of appendix A–3 to part 60 to leak check the entire sampling system. Specifically perform the following procedures:

8.6.5.1 *Sampling train.* You must pretest the entire sampling train for leaks. The pretest leak check must have a leak rate of not more than 0.02 actual cubic feet per minute or four percent of the average sample flow during the test run, whichever is less. Additionally, you must conduct the leak check at a vacuum equal to or greater than the vacuum anticipated during the test run. Enter the leak check results on the analytical data sheet (*see* Section 11.1) for the specific test. (**Note:** Do not conduct a leak check during port changes.)

8.6.5.2 *Pitot tube assembly.* After you leak check the sample train, perform a leak check of the pitot tube assembly. Follow the procedures outlined in Section 8.4.1 of Method 5 of appendix A–3 to part 60.

8.6.6 Sampling Head. You must preheat the combined sampling head to the stack temperature of the gas stream at the test location (± 10 °C, ± 50 °F). This will heat the sampling head and prevent moisture from condensing from the sample gas stream.

8.6.6.1 *Warmup.* You must complete a passive warmup (of 30–40 min) within the stack before the run begins to avoid internal condensation.

8.6.6.2 *Shortened warmup.* You can shorten the warmup time by thermostated heating outside the stack (such as by a heat gun). Then place the heated sampling head inside the stack and allow the temperature to equilibrate.

8.7 Sampling Train Operation. Operate the sampling train the same as described in Section 4.1.5 of Method 5 of appendix A–3 to part 60, but use the procedures in this section for isokinetic sampling and flow rate adjustment. Maintain the flow rate calculated in Section 8.4.1 throughout the run, provided the stack temperature is within 28 °C (50 °F) of the temperature used to calculate ΔH. If stack temperatures vary by more than 28 °C (50 °F), use the appropriate ΔH value calculated in Section 8.5.3. Determine the minimum number of traverse points as in Figure 7 of Section 17. Determine the minimum total projected sampling time based on achieving the data quality objectives or emission limit of the affected facility. We recommend that you round the number of minutes sampled at each point to the nearest 15 seconds. Perform the following procedures:

8.7.1 Sample Point Dwell Time. You must calculate the flow rate-weighted dwell time (that is, sampling time) for each sampling point to ensure that the overall run provides a velocity-weighted average that is representative of the entire gas stream. Vary the dwell time at each traverse point proportionately with the point velocity. Calculate the dwell time at each of the traverse points using Equation 24. You must use the data from the preliminary traverse to determine the average velocity pressure (Δp_{avg}). You must use the velocity pressure

measured during the sampling run to determine the velocity pressure at each point (Δp_n). Here, N_{tp} equals the total number of traverse points. Each traverse point must have a dwell time of at least two minutes.

8.7.2 Adjusted Velocity Pressure. When selecting your sampling points using your preliminary velocity traverse data, your preliminary velocity pressures must be adjusted to take into account the increase in velocity due to blockage. Also, you must adjust your preliminary velocity data for differences in pitot tube coefficients. Use the following instructions to adjust the preliminary velocity pressure.

8.7.2.1 *Different pitot tube coefficient.* You must use Equation 25 to correct the recorded preliminary velocity pressures if the pitot tube mounted on the combined cyclone sampling head has a different pitot tube coefficient than the pitot tube used during the preliminary velocity traverse (*see* Section 8.3.4).

8.7.2.2 *Probe blockage factor.* You must use Equation 26 to calculate an average probe blockage correction factor (b_f) if the diameter of your stack or duct is between 25.7 and 36.4 inches for the combined $PM_{2.5}/PM_{10}$ sampling head and pitot and between 18.8 and 26.5 inches for the $PM_{2.5}$ cyclone and pitot. A probe blockage factor is calculated because of the flow blockage caused by the relatively large cross-sectional area of the cyclone sampling head, as discussed in Section 8.3.2.2 and illustrated in Figures 8 and 9 of Section 17. You must determine the cross-sectional area of the cyclone head you use and determine its stack blockage factor. (**Note:** Commercially-available sampling heads (including the PM_{10} cyclone, $PM_{2.5}$ cyclone, pitot and filter holder) have a projected area of approximately 31.2 square inches when oriented into the gas stream. As the probe is moved from the most outer to the most inner point, the amount of blockage that actually occurs ranges from approximately 13 square inches to the full 31.2 inches plus the blockage caused by the probe extension. The average cross-sectional area blocked is 22 square inches.)

8.7.2.3 *Final adjusted velocity pressure.* Calculate the final adjusted velocity pressure (Δp_{s2}) using Equation 27. (**Note:** Figures 8 and 9 of Section 17 illustrate that the blockage effect of the combined PM_{10}, $PM_{2.5}$ cyclone sampling head, and pitot tube increases rapidly below stack diameters of 26.5 inches. Therefore, the combined PM_{10}, $PM_{2.5}$ filter sampling head and pitot tube is not applicable for stacks with a diameter less than 26.5 inches because the blockage is greater than six percent. For stacks with a diameter less than 26.5 inches, $PM_{2.5}$ particulate measurements may be possible using only a $PM_{2.5}$ cyclone, pitot tube, and in-stack filter. If the blockage exceeds three percent but is less than six percent, you must follow the procedures outlined in Method 1A of appendix A–1 to part 60 to conduct tests. You must conduct the velocity traverse downstream of the sampling location or immediately before the test run.

8.7.3 Sample Collection. Collect samples the same as described in Section 4.1.5 of Method 5 of appendix A–3 to part 60, except use the procedures in this section for isokinetic sampling and flow rate adjustment. Maintain the flow rate calculated in Section 8.5 throughout the run, provided the stack temperature is within 28 °C (50 °F) of the temperature used to calculate ΔH. If stack temperatures vary by more than 28 °C (50 °F), use the appropriate ΔH value calculated in Section 8.5.3. Calculate the dwell time at each traverse point as in Equation 24. In addition to these procedures, you must also use running starts and stops if the static pressure at the sampling location is less than minus 5 inches water column. This prevents back pressure from rupturing the sample filter. If you use a running start, adjust the flow rate to the calculated value after you perform the leak check (*see* Section 8.4).

8.7.3.1 *Level and zero manometers.* Periodically check the level and zero point of the manometers during the traverse. Vibrations and temperature changes may cause them to drift.

8.7.3.2 *Portholes.* Clean the portholes prior to the test run. This will minimize the chance of collecting deposited material in the nozzle.

8.7.3.3 *Sampling procedures.* Verify that the combined cyclone sampling head temperature is at stack temperature. You must maintain the temperature of the cyclone sampling head within ± 10 °C (± 18 °F) of the stack temperature. (**Note:** For many stacks, portions of the cyclones and filter will be external to the stack during part of the sampling traverse. Therefore, you must heat and/or insulate portions of the cyclones and filter that are not within the stack in order to maintain the sampling head temperature at the stack temperature. Maintaining the temperature will ensure proper particle sizing and prevent condensation on the walls of the cyclones.) To begin sampling, remove the protective cover from the nozzle. Position the probe at the first sampling point with the nozzle pointing directly into the gas stream. Immediately start the pump and adjust the flow to calculated isokinetic conditions. Ensure the probe/pitot tube assembly is leveled. (**Note:** When the probe is in position, block off the openings around the probe and porthole to prevent unrepresentative dilution of the gas stream. Take care to minimize contamination from material used to block the flow or insulate the sampling head during collection at the first sampling point.)

(a) Traverse the stack cross-section, as required by Method 1 of appendix A–1 to part 60, with the exception that you are only required to perform a 12-point traverse. Do not bump the cyclone nozzle into the stack walls when sampling near the walls or when removing or inserting the probe through the portholes. This will minimize the chance of extracting deposited materials.

(b) Record the data required on the field test data sheet for each run. Record the initial dry gas meter reading. Then take dry gas meter readings at the following times: the beginning and end of each sample time increment; when changes in flow rates are made; and when sampling is halted. Compare the velocity pressure measurements (Equations 22 and 23) with the velocity pressure measured during the preliminary traverse. Keep the meter box ΔH at the value calculated in Section 8.5.3 for the stack temperature that is observed during the test. Record all point-by-point data and other source test parameters on the field test data sheet. Do not leak check the sampling system during port changes.

(c) Maintain flow until the sampling head is completely removed from the sampling port. You must restart the sampling flow prior to inserting the sampling head into the sampling port during port changes.

(d) Maintain the flow through the sampling system at the last sampling point. At the conclusion of the test, remove the pitot tube and combined cyclone sampling head from the stack while the train is still operating (running stop). Make sure that you do not scrape the pitot tube or the combined cyclone sampling head against the port or stack walls. Then stop the pump and record the final dry gas meter reading and other test parameters on the field test data sheet. (**Note:** After you stop the pump, make sure you keep the combined cyclone head level to avoid tipping dust from the cyclone cups into the filter and/or down-comer lines.)

8.7.4 Process Data. You must document data and information on the process unit tested, the particulate control system used to control emissions, any non-particulate control system that may affect particulate emissions, the sampling train conditions, and weather conditions. Record the site barometric pressure and stack pressure on the field test data sheet. Discontinue the test if the operating conditions may cause non-representative particulate emissions.

8.7.4.1 *Particulate control system data.* Use the process and control system data to determine whether representative operating conditions were maintained throughout the testing period.

8.7.4.2 *Sampling train data.* Use the sampling train data to confirm that the measured particulate emissions are accurate and complete.

8.7.5 Sample Recovery. First remove the sampling head (combined cyclone/filter assembly) from the train probe. After the sample head is removed, perform a post-test leak check of the probe and sample train. Then recover the components from the cyclone/filter. Refer to the following sections for more detailed information.

8.7.5.1 *Remove sampling head.* After cooling and when the probe can be safely handled, wipe off all external surfaces near the cyclone nozzle and cap the inlet to the cyclone to prevent PM from entering the assembly. Remove the combined cyclone/filter sampling head from the probe. Cap the outlet of the filter housing to prevent PM from entering the assembly.

8.7.5.2 *Leak check probe/sample train assembly (post-test).* Leak check the remainder of the probe and sample train assembly (including meter box) after removing the combined cyclone head/filter. You must conduct the leak rate at a vacuum equal to or greater than the maximum vacuum achieved during the test run. Enter the results of the leak check onto the field test data sheet. If the leak rate of the sampling train (without the combined cyclone sampling head) exceeds 0.02 actual cubic feet per minute or four percent of the average sampling rate during the test run (whichever

is less), the run is invalid and must be repeated.

8.7.5.3 *Weigh or measure the volume of the liquid collected in the water collection impingers and silica trap.* Measure the liquid in the first impingers to within 1 ml using a clean graduated cylinder or by weighing it to within 0.5 g using a balance. Record the volume of the liquid or weight of the liquid present to be used to calculate the moisture content of the effluent gas.

8.7.5.4 *Weigh the silica impinger.* If a balance is available in the field, weigh the silica impinger to within 0.5 g. Note the color of the indicating silica gel in the last impinger to determine whether it has been completely spent and make a notation of its condition. If you are measuring CPM in combination with this method, the weight of the silica gel can be determined before or after the post-test nitrogen purge is complete (See Section 8.5.3 of Method 202 of appendix M to this part).

8.7.5.5 *Recovery of PM.* Recovery involves the quantitative transfer of particles in the following size range: greater than 10 micrometers; less than or equal to 10 micrometers but greater than 2.5 micrometers; and less than or equal to 2.5 micrometers. You must use a nylon or fluoropolymer brush and an acetone rinse to recover particles from the combined cyclone/filter sampling head. Use the following procedures for each container:

(a) *Container #1, Less than or equal to $PM_{2.5}$ micrometer filterable particulate.* Use tweezers and/or clean disposable surgical gloves to remove the filter from the filter holder. Place the filter in the Petri dish that you labeled with the test identification and Container #1. Using a dry brush and/or a sharp-edged blade, carefully transfer any PM and/or filter fibers that adhere to the filter holder gasket or filter support screen to the Petri dish. Seal the container. This container holds particles less than or equal to 2.5 micrometers that are caught on the in-stack filter. (**Note:** If the test is conducted for PM_{10} only, then Container #1 would be for less than or equal to $PM_{2.5}$ micrometer filterable particulate.)

(b) *Container #2, Greater than PM_{10} micrometer filterable particulate.* Quantitatively recover the PM from the cyclone I cup and brush cleaning and acetone rinses of the cyclone cup, internal surface of the nozzle, and cyclone I internal surfaces, including the outside surface of the downcomer line. Seal the container and mark the liquid level on the outside of the container you labeled with test identification and Container #2. You must keep any dust found on the outside of cyclone I and cyclone nozzle external surfaces out of the sample. This container holds PM greater than 10 micrometers.

(c) *Container #3, Filterable particulate less than or equal to 10 micrometer and greater than 2.5 micrometers.* Place the solids from cyclone cup IV and the acetone (and brush cleaning) rinses of the cyclone I turnaround cup (above inner downcomer line), inside of the downcomer line, and interior surfaces of cyclone IV into Container #3. Seal the container and mark the liquid level on the outside of the container you labeled with test identification and Container #3. This container holds PM less than or equal to 10 micrometers but greater than 2.5 micrometers.

(d) *Container #4, Less than or equal to $PM_{2.5}$ micrometers acetone rinses of the exit tube of cyclone IV and front half of the filter holder.* Place the acetone rinses (and brush cleaning) of the exit tube of cyclone IV and the front half of the filter holder in container #4. Seal the container and mark the liquid level on the outside of the container you labeled with test identification and Container #4. This container holds PM that is less than or equal to 2.5 micrometers.

(e) *Container #5, Cold impinger water.* If the water from the cold impinger used for moisture collection has been weighed in the field, it can be discarded. Otherwise, quantitatively transfer liquid from the cold impinger that follows the ambient filter into a clean sample bottle (glass or plastic). Mark the liquid level on the bottle you labeled with test identification and Container #5. This container holds the remainder of the liquid water from the emission gases. If you collected condensable PM using Method 202 of appendix M to this part in conjunction with using this method, you must follow the procedures in Method 202 of appendix M to this part to recover impingers and silica used to collect moisture.

(f) *Container #6, Silica gel absorbent.* Transfer the silica gel to its original container labeled with test identification and Container #6 and seal. A funnel may make it easier to pour the silica gel without spilling. A rubber policeman may be used as an aid in removing the silica gel from the impinger. It is not necessary to remove the small amount of silica gel dust particles that may adhere to the impinger wall and are difficult to remove. Since the gain in weight is to be used for moisture calculations, do not use any water or other liquids to transfer the silica gel. If the silica gel has been weighed in the field to measure water content, it can be discarded. Otherwise, the contents of Container #6 are weighed during sample analysis.

(g) *Container #7, Acetone field reagent blank.* Take approximately 200 ml of the acetone directly from the wash bottle you used and place it in Container #7 labeled "Acetone Field Reagent Blank."

8.7.6 Transport Procedures. Containers must remain in an upright position at all times during shipping. You do not have to ship the containers under dry or blue ice.

9.0 Quality Control

9.1 Daily Quality Checks. You must perform daily quality checks of field log books and data entries and calculations using data quality indicators from this method and your site-specific test plan. You must review and evaluate recorded and transferred raw data, calculations, and documentation of testing procedures. You must initial or sign log book pages and data entry forms that were reviewed.

9.2 Calculation Verification. Verify the calculations by independent, manual checks. You must flag any suspect data and identify the nature of the problem and potential effect on data quality. After you complete the test, prepare a data summary and compile all the calculations and raw data sheets.

9.3 Conditions. You must document data and information on the process unit tested, the particulate control system used to control emissions, any non-particulate control system that may affect particulate emissions, the sampling train conditions, and weather conditions. Discontinue the test if the operating conditions may cause non-representative particulate emissions.

9.4 Field Analytical Balance Calibration Check. Perform calibration check procedures on field analytical balances each day that they are used. You must use National Institute of Standards and Technology (NIST)-traceable weights at a mass approximately equal to the weight of the sample plus container you will weigh.

10.0 Calibration and Standardization

Maintain a log of all filterable particulate sampling and analysis calibrations. Include copies of the relevant portions of the calibration and field logs in the final test report.

10.1 Gas Flow Velocities. You must use an S-type pitot tube that meets the required EPA specifications (EPA Publication 600/4–77–0217b) during these velocity measurements. (**Note:** If, as specified in Section 8.7.2.3, testing is performed in stacks less than 26.5 inches in diameter, testers may use a standard pitot tube according to the requirements in Method 4A or 5 of appendix A–3 to part 60.) You must also complete the following:

(a) Visually inspect the S-type pitot tube before sampling.

(b) Leak check both legs of the pitot tube before and after sampling.

(c) Maintain proper orientation of the S-type pitot tube while making measurements.

10.1.1 S-type Pitot Tube Orientation. The S-type pitot tube is properly oriented when the yaw and the pitch axis are 90 degrees to the air flow.

10.1.2 Average Velocity Pressure Record. Instead of recording either high or low values, record the average velocity pressure at each point during flow measurements.

10.1.3 Pitot Tube Coefficient. Determine the pitot tube coefficient based on physical measurement techniques described in Method 2 of appendix A–1 to part 60. (**Note:** You must calibrate the pitot tube on the sampling head because of potential interferences from the cyclone body. Refer to Section 8.7.2 for additional information.)

10.2 Thermocouple Calibration. You must calibrate the thermocouples using the procedures described in Section 10.3.1 of Method 2 of appendix A–1 to part 60 or Alternative Method 2 Thermocouple Calibration (ALT–011). Calibrate each temperature sensor at a minimum of three points over the anticipated range of use against a NIST-traceable thermometer. Alternatively, a reference thermocouple and potentiometer calibrated against NIST standards can be used.

10.3 Nozzles. You may use stainless steel (316 or equivalent), high-temperature steel alloy, or fluoropolymer-coated nozzles for isokinetic sampling. Make sure that all nozzles are thoroughly cleaned, visually inspected, and calibrated according to the

procedure outlined in Section 10.1 of Method 5 of appendix A–3 to part 60.

10.4 Dry Gas Meter Calibration. Calibrate your dry gas meter following the calibration procedures in Section 16.1 of Method 5 of appendix A–3 to part 60. Also, make sure you fully calibrate the dry gas meter to determine the volume correction factor prior to field use. Post-test calibration checks must be performed as soon as possible after the equipment has been returned to the shop. Your pre-test and post-test calibrations must agree within ± 5 percent.

10.5 Glassware. Use class A volumetric glassware for titrations, or calibrate your equipment against NIST-traceable glassware.

11.0 Analytical Procedures

11.1 Analytical Data Sheet. Record all data on the analytical data sheet. Obtain the data sheet from Figure 5–6 of Method 5 of appendix A–3 to part 60. Alternatively, data may be recorded electronically using software applications such as the Electronic Reporting Tool located at *http://www.epa.gov/ttn/chief/ert/ert_tool.html.*

11.2 Dry Weight of PM. Determine the dry weight of particulate following procedures outlined in this section.

11.2.1 Container #1, Less than or Equal to $PM_{2.5}$ Micrometer Filterable Particulate. Transfer the filter and any loose particulate from the sample container to a tared weighing dish or pan that is inert to solvent or mineral acids. Desiccate for 24 hours in a dessicator containing anhydrous calcium sulfate. Weigh to a constant weight and report the results to the nearest 0.1 mg. (See Section 3.0 for a definition of Constant weight.) If constant weight requirements cannot be met, the filter must be treated as described in Section 11.2.1 of Method 202 of appendix M to this part. Extracts resulting from the use of this procedure must be filtered to remove filter fragments before the filter is processed and weighed.

11.2.2 Container #2, Greater than PM_{10} Micrometer Filterable Particulate Acetone Rinse. Separately treat this container like Container #4.

11.2.3 Container #3, Filterable Particulate Less than or Equal to 10 Micrometer and Greater than 2.5 Micrometers Acetone Rinse. Separately treat this container like Container #4.

11.2.4 Container #4, Less than or Equal to $PM_{2.5}$ Micrometers Acetone Rinse of the Exit Tube of Cyclone IV and Front Half of the Filter Holder. Note the level of liquid in the container and confirm on the analysis sheet whether leakage occurred during transport. If a noticeable amount of leakage has occurred, either void the sample or use methods (subject to the approval of the Administrator) to correct the final results. Quantitatively transfer the contents to a tared 250 ml beaker or tared fluoropolymer beaker liner, and evaporate to dryness at room temperature and pressure in a laboratory hood. Desiccate for 24 hours and weigh to a constant weight. Report the results to the nearest 0.1 mg.

11.2.5 Container #5, Cold Impinger Water. If the amount of water has not been determined in the field, note the level of liquid in the container and confirm on the analysis sheet whether leakage occurred during transport. If a noticeable amount of leakage has occurred, either void the sample or use methods (subject to the approval of the Administrator) to correct the final results. Measure the liquid in this container either volumetrically to ± 1 ml or gravimetrically to ± 0.5 g.

11.2.6 Container #6, Silica Gel Absorbent. Weigh the spent silica gel (or silica gel plus impinger) to the nearest 0.5 g using a balance. This step may be conducted in the field.

11.2.7 Container #7, Acetone Field Reagent Blank. Use 150 ml of acetone from the blank container used for this analysis. Transfer 150 ml of the acetone to a clean 250-ml beaker or tared fluoropolymer beaker liner. Evaporate the acetone to dryness at room temperature and pressure in a laboratory hood. Following evaporation, desiccate the residue for 24 hours in a desiccator containing anhydrous calcium sulfate. Weigh and report the results to the nearest 0.1 mg.

12.0 Calculations and Data Analysis

12.1 Nomenclature. Report results in International System of Units (SI units) unless the regulatory authority that established the requirement to use this test method specifies reporting in English units. The following nomenclature is used.

A = Area of stack or duct at sampling location, square inches.
A_n = Area of nozzle, square feet.
b_f = Average blockage factor calculated in Equation 26, dimensionless.
B_{ws} = Moisture content of gas stream, fraction (*e.g.,* 10 percent H_2O is B_{ws} = 0.10).
C = Cunningham correction factor for particle diameter, D_p, and calculated using the actual stack gas temperature, dimensionless.
$\%CO_2$ = Carbon Dioxide content of gas stream, percent by volume.
C_a = Acetone blank concentration, mg/mg.
C_{fPM10} = Conc. of filterable PM_{10}, gr/DSCF.
$C_{fPM2.5}$ = Conc. of filterable $PM_{2.5}$, gr/DSCF.
C_p = Pitot coefficient for the combined cyclone pitot, dimensionless.
C_p' = Coefficient for the pitot used in the preliminary traverse, dimensionless.
C_r = Re-estimated Cunningham correction factor for particle diameter equivalent to the actual cut size diameter and calculated using the actual stack gas temperature, dimensionless.
C_{tf} = Conc. of total filterable PM, gr/DSCF.
C_1 = -150.3162 (micropoise)
C_2 = 18.0614 (micropoise/$K^{0.5}$) = 13.4622 (micropoise/$R^{0.5}$)
C_3 = 1.19183×10^6 (micropoise/K^2) = 3.86153×10^6 (micropoise/R^2)
C_4 = 0.591123 (micropoise)
C_5 = 91.9723 (micropoise)
C_6 = 4.91705×10^{-5} (micropoise/K^2) = 1.51761×10^{-5} (micropoise/R^2)
D = Inner diameter of sampling nozzle mounted on Cyclone I, inches.
D_p = Physical particle size, micrometers.
D_{50} = Particle cut diameter, micrometers.
D_{50-1} = Re-calculated particle cut diameters based on re-estimated C_r, micrometers.
D_{50LL} = Cut diameter for cyclone I corresponding to the 2.25 micrometer cut diameter for cyclone IV, micrometers.
D_{50N} = D_{50} value for cyclone IV calculated during the Nth iterative step, micrometers.
$D_{50(N+1)}$ = D_{50} value for cyclone IV calculated during the N+1 iterative step, micrometers.
D_{50T} = Cyclone I cut diameter corresponding to the middle of the overlap zone shown in Figure 10 of Section 17, micrometers.
I = Percent isokinetic sampling, dimensionless.
K_p = 85.49, ((ft/sec)/(pounds/mole -°R)).
m_a = Mass of residue of acetone after evaporation, mg.
M_d = Molecular weight of dry gas, pounds/pound mole.
mg = Milligram.
mg/L = Milligram per liter.
M_w = Molecular weight of wet gas, pounds/pound mole.
M_1 = Milligrams of PM collected on the filter, less than or equal to 2.5 micrometers.
M_2 = Milligrams of PM recovered from Container #2 (acetone blank corrected), greater than 10 micrometers.
M_3 = Milligrams of PM recovered from Container #3 (acetone blank corrected), less than or equal to 10 and greater than 2.5 micrometers.
M_4 = Milligrams of PM recovered from Container #4 (acetone blank corrected), less than or equal to 2.5 micrometers.
N_{tp} = Number of iterative steps or total traverse points.
N_{re} = Reynolds number, dimensionless.
$\%O_{2,wet}$ = Oxygen content of gas stream, % by volume of wet gas.

(**Note:** The oxygen percentage used in Equation 3 is on a wet gas basis. That means that since oxygen is typically measured on a dry gas basis, the measured percent O_2 must be multiplied by the quantity ($1-B_{ws}$) to convert to the actual volume fraction. Therefore, $\%O_{2,wet} = (1-B_{ws}) * \%O_{2,\ dry}$)

P_{bar} = Barometric pressure, inches Hg.
P_s = Absolute stack gas pressure, inches Hg.
Q_s = Sampling rate for cyclone I to achieve specified D_{50}.
Q_{sST} = Dry gas sampling rate through the sampling assembly, DSCFM.
Q_I = Sampling rate for cyclone I to achieve specified D_{50}.
R_{max} = Nozzle/stack velocity ratio parameter, dimensionless.
R_{min} = Nozzle/stack velocity ratio parameter, dimensionless.
T_m = Meter box and orifice gas temperature, °R.
t_n = Sampling time at point n, min.
t_r = Total projected run time, min.
T_s = Absolute stack gas temperature, °R.
t_1 = Sampling time at point 1, min.
v_{max} = Maximum gas velocity calculated from Equations 18 or 19, ft/sec.
v_{min} = Minimum gas velocity calculated from Equations 16 or 17, ft/sec.
v_n = Sample gas velocity in the nozzle, ft/sec.
v_s = Velocity of stack gas, ft/sec.
V_a = Volume of acetone blank, ml.
V_{aw} = Volume of acetone used in sample recovery wash, ml.
V_c = Quantity of water captured in impingers and silica gel, ml.
V_m = Dry gas meter volume sampled, ACF.
V_{ms} = Dry gas meter volume sampled, corrected to standard conditions, DSCF.

V_{ws} = Volume of water vapor, SCF.
V_b = Volume of aliquot taken for IC analysis, ml.
V_{ic} = Volume of impinger contents sample, ml.
W_a = Weight of blank residue in acetone used to recover samples, mg.
$W_{2,3,4}$ = Weight of PM recovered from Containers #2, #3, and #4, mg.
Z = Ratio between estimated cyclone IV D_{50} values, dimensionless.
ΔH = Meter box orifice pressure drop, inches W.C.
$\Delta H_@$ = Pressure drop across orifice at flow rate of 0.75 SCFM at standard conditions, inches W.C.

(**Note:** Specific to each orifice and meter box.)

$[(\Delta p)^{0.5}]_{avg}$ = Average of square roots of the velocity pressures measured during the preliminary traverse, inches W.C.
Δp_m = Observed velocity pressure using S-type pitot tube in preliminary traverse, inches W.C.
Δp_{avg} = Average velocity pressure, inches W.C.
Δp_{max} = Maximum velocity pressure, inches W.C.
Δp_{min} = Minimum velocity pressure, inches W.C.
Δp_n = Velocity pressure measured at point n during the test run, inches W.C.
Δp_s = Velocity pressure calculated in Equation 25, inches W.C.
Δp_{s1} = Velocity pressure adjusted for combined cyclone pitot tube, inches W.C.
Δp_{s2} = Velocity pressure corrected for blockage, inches W.C.
Δp_1 = Velocity pressure measured at point 1, inches W.C.
γ = Dry gas meter gamma value, dimensionless.
μ = Gas viscosity, micropoise.
θ = Total run time, min.
ρ_a = Density of acetone, mg/ml (see label on bottle).
12.0 = Constant calculated as 60 percent of 20.5 square inch cross-sectional area of combined cyclone head, square inches.

12.2 Calculations. Perform all of the calculations found in Table 6 of Section 17. Table 6 of Section 17 also provides instructions and references for the calculations.

12.3 Analyses. Analyze D_{50} of cyclone IV and the concentrations of the PM in the various size ranges.

12.3.1 D_{50} of Cyclone IV. To determine the actual D_{50} for cyclone IV, recalculate the Cunningham correction factor and the Reynolds number for the best estimate of cyclone IV D_{50}. The following sections describe additional information on how to recalculate the Cunningham correction factor and determine which Reynolds number to use.

12.3.1.1 *Cunningham correction factor.* Recalculate the initial estimate of the Cunningham correction factor using the actual test data. Insert the actual test run data and D_{50} of 2.5 micrometers into Equation 4. This will give you a new Cunningham correction factor based on actual data.

12.3.1.2 *Initial D_{50} for cyclone IV.* Determine the initial estimate for cyclone IV D_{50} using the test condition Reynolds number calculated with Equation 10 as indicated in Table 3 of Section 17. Refer to the following instructions.

(a) If the Reynolds number is less than 3,162, calculate the D_{50} for cyclone IV with Equation 34, using actual test data.

(b) If the Reynolds number is greater than or equal to 3,162, calculate the D_{50} for cyclone IV with Equation 35 using actual test data.

(c) Insert the "new" D_{50} value calculated by either Equation 34 or 35 into Equation 36 to re-establish the Cunningham Correction Factor (C_r). (**Note:** Use the test condition calculated Reynolds number to determine the most appropriate equation (Equation 34 or 35).)

12.3.1.3 *Re-establish cyclone IV D_{50}.* Use the re-established Cunningham correction factor (calculated in the previous step) and the calculated Reynolds number to determine D_{50-1}.

(a) Use Equation 37 to calculate the re-established cyclone IV D_{50-1} if the Reynolds number is less than 3,162.

(b) Use Equation 38 to calculate the re-established cyclone IV D_{50-1} if the Reynolds number is greater than or equal to 3,162.

12.3.1.4 *Establish "Z" values.* The "Z" value is the result of an analysis that you must perform to determine if the C_r is acceptable. Compare the calculated cyclone IV D_{50} (either Equation 34 or 35) to the re-established cyclone IV D_{50-1} (either Equation 36 or 37) values based upon the test condition calculated Reynolds number (Equation 39). Follow these procedures.

(a) Use Equation 39 to calculate the "Z" values. If the "Z" value is between 0.99 and 1.01, the D_{50-1} value is the best estimate of the cyclone IV D_{50} cut diameter for your test run.

(b) If the "Z" value is greater than 1.01 or less than 0.99, re-establish a C_r based on the D_{50-1} value determined in either Equations 36 or 37, depending upon the test condition Reynolds number.

(c) Use the second revised C_r to re-calculate the cyclone IV D_{50}.

(d) Repeat this iterative process as many times as necessary using the prescribed equations until you achieve the criteria documented in Equation 40.

12.3.2 Particulate Concentration. Use the particulate catch weights in the combined cyclone sampling train to calculate the concentration of PM in the various size ranges. You must correct the concentrations for the acetone blank.

12.3.2.1 *Acetone blank concentration.* Use Equation 42 to calculate the acetone blank concentration (C_a).

12.3.2.2 *Acetone blank residue weight.* Use Equation 44 to calculate the acetone blank weight ($W_{a\,(2,3,4)}$). Subtract the weight of the acetone blank from the particulate weight catch in each size fraction.

12.3.2.3 *Particulate weight catch per size fraction.* Correct each of the PM weights per size fraction by subtracting the acetone blank weight (*i.e.,* $M_{2,3,4}$–W_a). (**Note:** Do not subtract a blank value of greater than 0.1 mg per 100 ml of the acetone used from the sample recovery.) Use the following procedures.

(a) Use Equation 45 to calculate the PM recovered from Containers #1, #2, #3, and #4. This is the total collectable PM (C_{tf}).

(b) Use Equation 46 to determine the quantitative recovery of PM_{10} (C_{fPM10}) from Containers #1, #3, and #4.

(c) Use Equation 47 to determine the quantitative recovery of $PM_{2.5}$ ($C_{fPM2.5}$) recovered from Containers #1 and #4.

12.4 Reporting. You must prepare a test report following the guidance in EPA Guidance Document 043, Preparation and Review of Test Reports (December 1998).

12.5 Equations. Use the following equations to complete the calculations required in this test method.

Molecular Weight of Dry Gas. Calculate the molecular weight of the dry gas using Equation 1.

$$M_d = 0.44\,(\%\,CO_2) + 0.32\,(\%\,O_2) + 0.28\,(100 - \%\,O_2 - \%\,CO_2) \qquad \text{(Eq. 1)}$$

Molecular Weight of Wet Gas. Calculate the molecular weight of the stack gas on a wet basis using Equation 2.

$$M_w = M_d\,(1 - B_{ws}) + 18\,(B_{ws}) \qquad \text{(Eq. 2)}$$

Gas Stream Viscosity. Calculate the gas stream viscosity using Equation 3. This equation uses constants for gas temperatures in °R.

$$\mu = C_1 + C_2\sqrt{T_s} + C_3 T_s^{-2} + C_4(\%O_{2,wet}) - C_5 B_{ws} + C_6 B_{ws} T_s^2 \qquad \text{(Eq. 3)}$$

Cunningham Correction Factor. The Cunningham correction factor is calculated for a 2.25 micrometer diameter particle.

$$C = 1 + 0.0057193\left[\frac{\mu}{P_s D_{50}}\right]\left[\frac{T_s}{M_w}\right]^{0.5} \qquad \text{(Eq. 4)}$$

Lower Limit Cut Diameter for Cyclone I for N_{re} Less than 3,162. The Cunningham correction factor is calculated for a 2.25 micrometer diameter particle.

$$D_{50\,LL} = 9.507\,C^{0.3007}\left[\frac{M_w P_s}{T_s}\right]^{0.1993} \qquad \text{(Eq. 5)}$$

Cut Diameter for Cyclone I for the Middle of the Overlap Zone.

$$D_{50\,T} = \left(\frac{11 + D_{50\,LL}}{2}\right) \qquad \text{(Eq. 6)}$$

Sampling Rate Using Both PM_{10} and $PM_{2.5}$ Cyclones.

$$Q_s = Q_I = 0.07296\,(\mu)\left[\frac{T_s}{M_w P_s}\right]^{0.2949}\left[\frac{1}{D_{50T}}\right]^{1.4102} \qquad \text{(Eq. 7)}$$

Sampling Rate Using Only $PM_{2.5}$ Cyclone. For N_{re} Less than 3,162:

$$Q_{IV} = 0.060639\left[\frac{\mu}{C^{0.4242}}\right]\left[\frac{P_S M_W}{T_s}\right]^{-0.5759}\left[\frac{1}{D_{50}}\right]^{0.8481} \qquad \text{(Eq. 8)}$$

For N_{re} greater than or equal to 3,162:

$$Q_{IV} = 0.007657\left[\frac{\mu}{C^{0.6205}}\right]\left[\frac{P_S M_W}{T_s}\right]^{-0.3795}\left[\frac{1}{D_{50}}\right]^{1.241} \qquad \text{(Eq. 9)}$$

Reynolds Number.

$$N_{re} = 8.64 \times 10^5\left[\frac{P_s M_w}{T_s}\right]\left[\frac{Q_s}{\mu}\right] \qquad \text{(Eq. 10)}$$

Meter Box Orifice Pressure Drop.

$$\Delta H = \left[\frac{Q_s (1 - B_{ws}) P_s}{T_s}\right]^2 \left[\frac{1.083\, T_m\, M_d\, \Delta H@}{P_{bar}}\right] \qquad \text{(Eq. 11)}$$

Lower Limit Cut Diameter for Cyclone I for N_{re} Greater than or Equal to 3,162. The Cunningham correction factor is calculated for a 2.25 micrometer diameter particle.

$$D_{50LL} = 10.0959\, C^{0.4400} \left[\frac{M_w\, P_s}{T_s}\right]^{0.0600} \qquad \text{(Eq. 12)}$$

Velocity of Stack Gas. Correct the mean preliminary velocity pressure for C_p and blockage using Equations 25, 26, and 27.

$$v_s = K_p\, C_p \left(\sqrt{(\Delta p)}\right)_{avg} \left[\sqrt{\frac{T_s}{P_s\, M_w}}\right] \qquad \text{(Eq. 13)}$$

Calculated Nozzle Diameter for Acceptable Sampling Rate.

$$D = \left[\frac{3.056\, Q_s}{v_s}\right]^{0.5} \qquad \text{(Eq. 14)}$$

Velocity of Gas in Nozzle.

$$V_n = \frac{\left(\dfrac{Q_s}{60 \dfrac{min}{s}}\right)}{A_n} \qquad \text{(Eq. 15)}$$

Minimum Nozzle/Stack Velocity Ratio Parameter.

$$R_{min} = \left[0.2457 + \left(0.3072 - \frac{0.2603\, (\mu)\, (Q_s)^{0.5}}{v_n^{1.5}}\right)^{0.5}\right] \qquad \text{(Eq. 16)}$$

Maximum Nozzle/Stack Velocity Ratio Parameter.

$$R_{max} = \left[0.4457 + \left(0.5690 + \frac{0.2603\, (\mu)\, (Q_s)^{0.5}}{v_n^{1.5}}\right)^{0.5}\right] \qquad \text{(Eq. 17)}$$

Minimum Gas Velocity for R_{min} Less than 0.5.

$$v_{min} = v_n (0.5) \qquad \text{(Eq. 18)}$$

Minimum Gas Velocity for R_{min} Greater than or Equal to 0.5.

$$v_{min} = v_n \; R_{min} \qquad \text{(Eq. 19)}$$

Maximum Gas Velocity for R_{max} Less than to 1.5.

$$v_{max} = v_n \; R_{max} \qquad \text{(Eq. 20)}$$

Maximum Gas Velocity for R_{max} Greater than or Equal to 1.5.

$$v_{max} = v_n (1.5) \qquad \text{(Eq. 21)}$$

Minimum Velocity Pressure.

$$\Delta p_{min} = 1.3686 \times 10^{-4} \left[\frac{P_s \; M_w}{T_s}\right] \left[\frac{v_{min}}{C_p}\right]^2 \qquad \text{(Eq. 22)}$$

Maximum Velocity Pressure.

$$\Delta p_{max} = 1.3686 \times 10^{-4} \left[\frac{P_s \; M_w}{T_s}\right] \left[\frac{v_{max}}{C_p}\right]^2 \qquad \text{(Eq. 23)}$$

Sampling Dwell Time at Each Point. N_{tp} is the total number of traverse points. You must use the preliminary velocity traverse data.

$$t_n = \left[\frac{Cp\sqrt{\Delta p_n}}{C^1 p\left(\sqrt{\Delta p_1}\right)_{avg}}\right] \left[\frac{t_r}{N_{tp}}\right] \qquad \text{(Eq. 24)}$$

Adjusted Velocity Pressure.

$$\Delta p_s = \Delta p_m \left[\frac{C_p}{C_p^{'}}\right]^2 \qquad \text{(Eq. 25)}$$

Average Probe Blockage Factor.

$$b_f = \frac{22.0}{A} \qquad \text{(Eq. 26)}$$

Velocity Pressure.

$$\Delta p_{s_2} = \Delta p_{s_1} \left[\frac{1}{(1 - b_f)}\right]^2 \qquad \text{(Eq. 27)}$$

Dry Gas Volume Sampled at Standard Conditions.

$$V_{ms} = \left[\frac{528}{29.92}\right] [\gamma\ V_m] \left[\frac{\left(P_{bar} + \frac{\Delta H}{13.6}\right)}{T_m}\right] \qquad \text{(Eq. 28)}$$

Sample Flow Rate at Standard Conditions.

$$Q_{sST} = \frac{V_{ms}}{\theta} \qquad \text{(Eq. 29)}$$

Volume of Water Vapor.

$$V_{ws} = 0.04707\ V_c \qquad \text{(Eq.30)}$$

Moisture Content of Gas Stream.

$$B_{ws} = \left[\frac{V_{ws}}{V_{ms} + V_{ws}}\right] \qquad \text{(Eq. 31)}$$

Sampling Rate.

$$Q_s = \frac{29.92}{528} Q_{sST} \left[\frac{1}{(1 - B_{ws})}\right] \left[\frac{T_s}{P_s}\right] \qquad \text{(Eq. 32)}$$

(**Note:** The viscosity and Reynolds Number must be recalculated using the actual stack temperature, moisture, and oxygen content.)

Actual Particle Cut Diameter for Cyclone I. This is based on actual temperatures and pressures measured during the test run.

$$D_{50} = 0.15625 \left[\frac{T_s}{M_w\ P_s}\right]^{0.2091} \left[\frac{\mu}{Q_s}\right]^{0.7091} \qquad \text{(Eq. 33)}$$

Particle Cut Diameter for N_{re} Less than 3,162 for Cyclone IV. C must be recalculated using the actual test data and a D_{50} for 2.5 micrometer diameter particle size.

$$D_{50} = 0.0024302 \left[\frac{\mu}{Q_s}\right]^{1.1791} \left[\frac{1}{C}\right]^{0.5} \left[\frac{T_s}{P_s\ M_w}\right]^{0.6790} \qquad \text{(Eq.34)}$$

Particle Cut Diameter for N_{re} Greater than or Equal to 3,162 for Cyclone IV. C must be recalculated using the actual test run data and a D_{50} for 2.5 micrometer diameter particle size.

$$D_{50} = 0.019723 \left[\frac{\mu}{Q_s}\right]^{0.8058} \left[\frac{1}{C}\right]^{0.5} \left[\frac{T_s}{P_s\ M_w}\right]^{0.3058} \qquad \text{(Eq. 35)}$$

Re-estimated Cunningham Correction Factor. You must use the actual test run Reynolds Number (N_{re}) value and select the appropriate D_{50} from Equation 33 or 34 (or Equation 37 or 38 if reiterating).

$$C_r = 1 + 0.0057193 \left[\frac{\mu}{P_s\ D_{50}}\right] \left[\frac{T_s}{M_w}\right]^{0.5} \qquad \text{(Eq. 36)}$$

Re-calculated Particle Cut Diameter for N_{re} Less than 3,162.

$$D_{50\text{-}1} = 0.0024302 \left[\frac{\mu}{Q_s}\right]^{1.1791} \left[\frac{1}{C_r}\right]^{0.5} \left[\frac{T_s}{P_s\ M_w}\right]^{0.6790} \qquad \text{(Eq. 37)}$$

Re-calculated Particle Cut Diameter for N Greater than or Equal to 3,162.

$$D_{50\text{-}1} = 0.019723 \left[\frac{\mu}{Q_s}\right]^{0.8058} \left[\frac{1}{C_r}\right]^{0.5} \left[\frac{T_S}{P_s\ M_w}\right]^{0.3058} \qquad \text{(Eq. 38)}$$

Ratio (Z) Between D_{50} and D_{50-1} Values.

$$Z = \frac{D_{50\text{-}1}}{D_{50}} \qquad \text{(Eq. 39)}$$

Acceptance Criteria for Z Values. The number of iterative steps is represented by N.

$$0.99 \leq \left[Z = \left(\frac{D_{50_N}}{D_{50_{N+1}}}\right)\right] \leq 1.01 \qquad \text{(Eq. 40)}$$

Percent Isokinetic Sampling.

$$I = \left(\frac{100\ T_s\ V_{ms}\ 29.92}{60\ v_s\ \theta\ A_n\ P_s\ (1 - B_{ws})\ 528}\right) \qquad \text{(Eq. 41)}$$

Acetone Blank Concentration.

$$C_a = \frac{m_a}{V_a\ \rho_a} \qquad \text{(Eq. 42)}$$

Acetone Blank Correction Weight.

$$M_{(2,3,4)} = W_{(2,3,4)} - W_{a(2,3,4)} \qquad \text{(Eq. 43)}$$

Acetone Blank Weight.

$$W_a = C_a \quad V_{aw} \rho_a \qquad \text{(Eq. 44)}$$

Concentration of Total Filterable PM.

$$C_{tf} = \left(\frac{7000}{453,592}\right)\left[\frac{M_1 + M_2 + M_3 + M_4}{V_{ms}}\right] \qquad \text{(Eq. 45)}$$

Concentration of Filterable PM_{10}.

$$C_{fPM10} = \left(\frac{7000}{453,592}\right)\left[\frac{M_1 + M_3 + M_4}{V_{ms}}\right] \qquad \text{(Eq. 46)}$$

Concentration of Filterable $PM_{2.5}$.

$$C_{fPM2.5} = \left(\frac{7000}{453,592}\right)\left[\frac{M_1 + M_4}{V_{ms}}\right] \qquad \text{(Eq. 47)}$$

13.0 Method Performance

13.1 Field evaluation of PM_{10} and total PM showed that the precision of constant sampling rate method was the same magnitude as Method 17 of appendix A–6 to part 60 (approximately five percent). Precision in PM_{10} and total PM between multiple trains showed standard deviations of four to five percent and total mass compared to 4.7 percent observed for Method 17 in simultaneous test runs at a Portland cement clinker cooler exhaust. The accuracy of the constant sampling rate PM_{10} method for total mass, referenced to Method 17, was -2 ± 4.4 percent (Farthing, 1988a).

13.2 Laboratory evaluation and guidance for PM_{10} cyclones were designed to limit error due to spatial variations to 10 percent. The maximum allowable error due to an isokinetic sampling was limited to ± 20 percent for 10 micrometer particles in laboratory tests (Farthing, 1988b).

13.3 A field evaluation of the revised Method 201A by EPA showed that the detection limit was 2.54 mg for total filterable PM, 1.44 mg for filterable PM_{10}, and 1.35 mg for $PM_{2.5}$. The precision resulting from 10 quadruplicate tests (40 test runs) conducted for the field evaluation was 6.7 percent relative standard deviation. The field evaluation also showed that the blank expected from Method 201A was less than 0.9 mg (EPA, 2010).

14.0 Alternative Procedures

Alternative methods for estimating the moisture content (ALT–008) and thermocouple calibration (ALT–011) can be found at *http://www.epa.gov/ttn/emc/approalt.html.*

15.0 Waste Management

[Reserved]

16.0 References

(1) Dawes, S.S., and W.E. Farthing. 1990. "Application Guide for Measurement of $PM_{2.5}$ at Stationary Sources," U.S. Environmental Protection Agency, Atmospheric Research and Exposure Assessment Laboratory, Research Triangle Park, NC, 27511, EPA–600/3–90/057 (NTIS No.: PB 90–247198).

(2) Farthing, *et al.* 1988a. "PM_{10} Source Measurement Methodology: Field Studies," EPA 600/3–88/055, NTIS PB89–194278/AS, U.S. Environmental Protection Agency, Research Triangle Park, NC 27711.

(3) Farthing, W.E., and S.S. Dawes. 1988b. "Application Guide for Source PM_{10} Measurement with Constant Sampling Rate," EPA/600/3–88–057, U.S. Environmental Protection Agency, Research Triangle Park, NC 27711.

(4) Richards, J.R. 1996. "Test protocol: PCA $PM_{10}/PM_{2.5}$ Emission Factor Chemical Characterization Testing," PCA R&D Serial No. 2081, Portland Cement Association.

(5) U.S. Environmental Protection Agency, Federal Reference Methods 1 through 5 and Method 17, 40 CFR part 60, Appendix A–1 through A–3 and A–6.

(6) U.S. Environmental Protection Agency. 2010. "Field Evaluation of an Improved Method for Sampling and Analysis of Filterable and Condensable Particulate Matter." Office of Air Quality Planning and Standards, Sector Policy and Program Division Monitoring Policy Group. Research Triangle Park, NC 27711.

17.0 Tables, Diagrams, Flowcharts, and Validation Data

You must use the following tables, diagrams, flowcharts, and data to complete this test method successfully.

TABLE 1—TYPICAL PM CONCENTRATIONS

Particle size range	Concentration and % by weight
Total collectable particulate	0.015 gr/DSCF.
Less than or equal to 10 and greater than 2.5 micrometers	40% of total collectable PM.

TABLE 1—TYPICAL PM CONCENTRATIONS—Continued

Particle size range	Concentration and % by weight
≤ 2.5 micrometers	20% of total collectable PM.

TABLE 2—REQUIRED CYCLONE CUT DIAMETERS (D_{50})

Cyclone	Min. cut diameter (micrometer)	Max. cut diameter (micrometer)
PM_{10} Cyclone (Cyclone I from five stage cyclone)	9	11
$PM_{2.5}$ Cyclone (Cyclone IV from five stage cyclone)	2.25	2.75

TABLE 3—TEST CALCULATIONS

If you are using . . .	To calculate . . .	Then use . . .
Preliminary data	Dry gas molecular weight, M_d	Equation 1.
Dry gas molecular weight (M_d) and preliminary moisture content of the gas stream.	wet gas molecular weight, M_W	Equation 2.[a]
Stack gas temperature, and oxygen and moisture content of the gas stream.	gas viscosity, μ	Equation 3.
Gas viscosity, μ	Cunningham correction factor[b], C	Equation 4.
Reynolds Number[c] (N_{re})	Preliminary lower limit cut diameter for cyclone I, D_{50LL}	Equation 5.
N_{re} less than 3,162		
D_{50LL} from Equation 5	Cut diameter for cyclone I for middle of the overlap zone, D_{50T}.	Equation 6.
D_{50T} from Equation 6	Final sampling rate for cyclone I, $Q_I(Q_s)$	Equation 7.
D_{50} for $PM_{2.5}$ cyclone and N_{re} less than 3,162	Final sampling rate for cyclone IV, Q_{IV}	Equation 8.
D_{50} for $PM_{2.5}$ cyclone and N_{re} greater than or equal to 3,162	Final sampling rate for cyclone IV, Q_{IV}	Equation 9.
$Q_I(Q_s)$ from Equation 7	Verify the assumed Reynolds number, N_{re}	Equation 10.

[a] Use Method 4 to determine the moisture content of the stack gas. Use a wet bulb-dry bulb measurement device or hand-held hygrometer to estimate moisture content of sources with gas temperature less than 160 °F.
[b] For the lower cut diameter of cyclone IV, 2.25 micrometer.
[c] Verify the assumed Reynolds number, using the procedure in Section 8.5.1, before proceeding to Equation 11.

TABLE 4—ΔH VALUES BASED ON PRELIMINARY TRAVERSE DATA

Stack Temperature (°R)	T_s—50°	T_s	T_s + 50°
ΔH, (inches W.C.)	a	a	a

[a] These values are to be filled in by the stack tester.

TABLE 5—VERIFICATION OF THE ASSUMED REYNOLDS NUMBER

If the N_{re} is . . .	Then . . .	And . . .
Less than 3,162	Calculate ΔH for the meter box	Assume original D_{50LL} is correct
Greater than or equal to 3,162	Recalculate D_{50LL} using Equation 12.	Substitute the "new" D_{50LL} into Equation 6 to recalculate D_{50T}.

TABLE 6—CALCULATIONS FOR RECOVERY OF PM_{10} AND $PM_{2.5}$

Calculations	Instructions and References
Average dry gas meter temperature	See field test data sheet.
Average orifice pressure drop	See field test data sheet.
Dry gas volume (V_{ms})	Use Equation 28 to correct the sample volume measured by the dry gas meter to standard conditions (20 °C, 760 mm Hg or 68 °F, 29.92 inches Hg).
Dry gas sampling rate (Q_{sST})	Must be calculated using Equation 29.
Volume of water condensed (V_{ws})	Use Equation 30 to determine the water condensed in the impingers and silica gel combination. Determine the total moisture catch by measuring the change in volume or weight in the impingers and weighing the silica gel.
Moisture content of gas stream (B_{ws})	Calculate this using Equation 31.
Sampling rate (Q_s)	Calculate this using Equation 32.
Test condition Reynolds number[a]	Use Equation 10 to calculate the actual Reynolds number during test conditions.

TABLE 6—CALCULATIONS FOR RECOVERY OF PM_{10} AND $PM_{2.5}$—Continued

Calculations	Instructions and References
Actual D_{50} of cyclone I	Calculate this using Equation 33. This calculation is based on the average temperatures and pressures measured during the test run.
Stack gas velocity (v_s)	Calculate this using Equation 13.
Percent isokinetic rate (%I)	Calculate this using Equation 41.

[a] Calculate the Reynolds number at the cyclone IV inlet during the test based on: (1) The sampling rate for the combined cyclone head, (2) the actual gas viscosity for the test, and (3) the dry and wet gas stream molecular weights.

BILLING CODE 6560–50–P

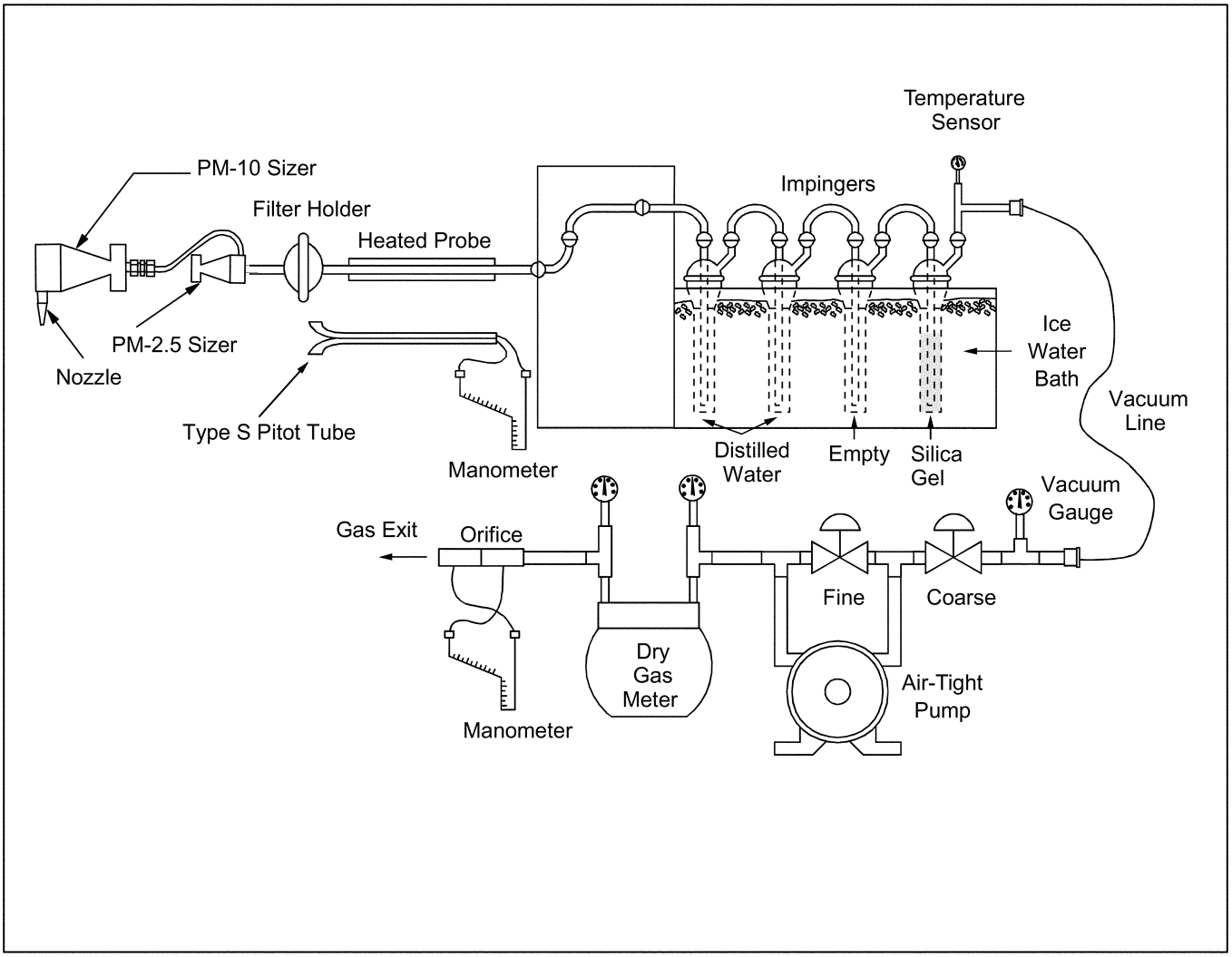

Figure 1. In-stack PM_{10} and $PM_{2.5}$ Sampling Train

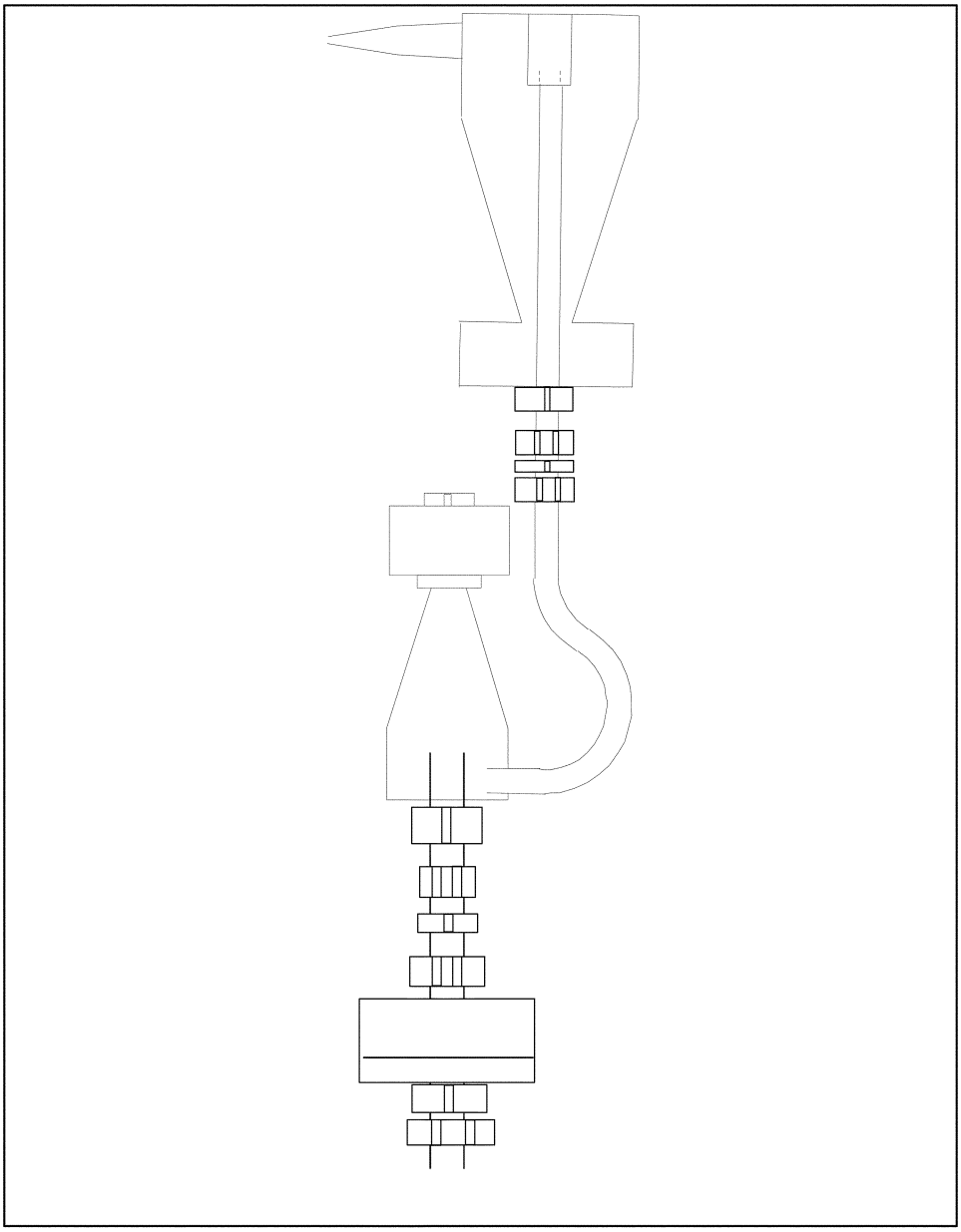

Figure 2. Combined Cyclone Sampling Head

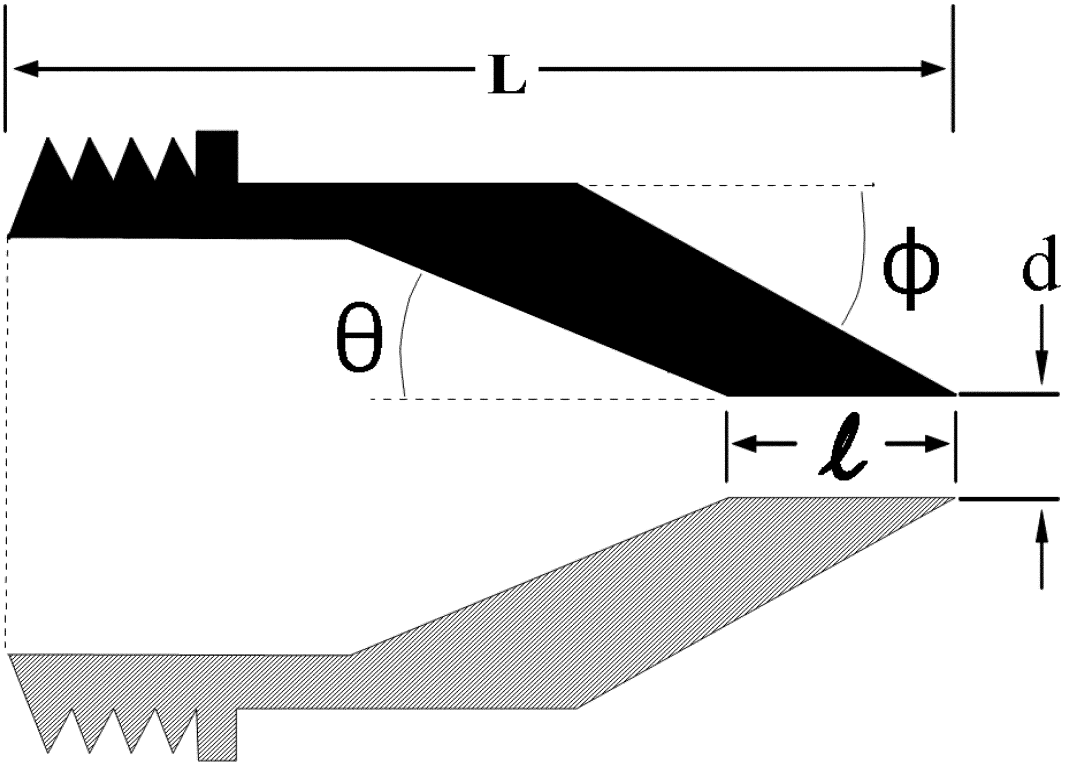

Nozzle Diameter, d (inches)	Cone Angle, θ (degrees)	Outside Taper, Φ (degrees)	Straight Inlet Length, l inches)	Total Length, L (inches)
0.125	4	15	<0.05	2.710 ± 0.05
0.136	4	15	<0.05	2.653 ± 0.05
0.150	4	15	<0.05	2.553 ± 0.05
0.164	5	15	<0.05	1.970 ± 0.05
0.180	6	15	<0.05	1.572 ± 0.05
0.197	6	15	<0.05	1.491 ± 0.05
0.215	6	15	<0.05	1.450 ± 0.05
0.233	6	15	<0.05	1.450 ± 0.05
0.264	5	15	<0.05	1.450 ± 0.05
0.300	4	15	<0.05	1.480 ± 0.05
0.342	4	15	<0.05	1.450 ± 0.05
0.390	3	15	<0.05	1.450 ± 0.05

Figure 3. Nozzle Design Specifications for PM_{10} Cyclone

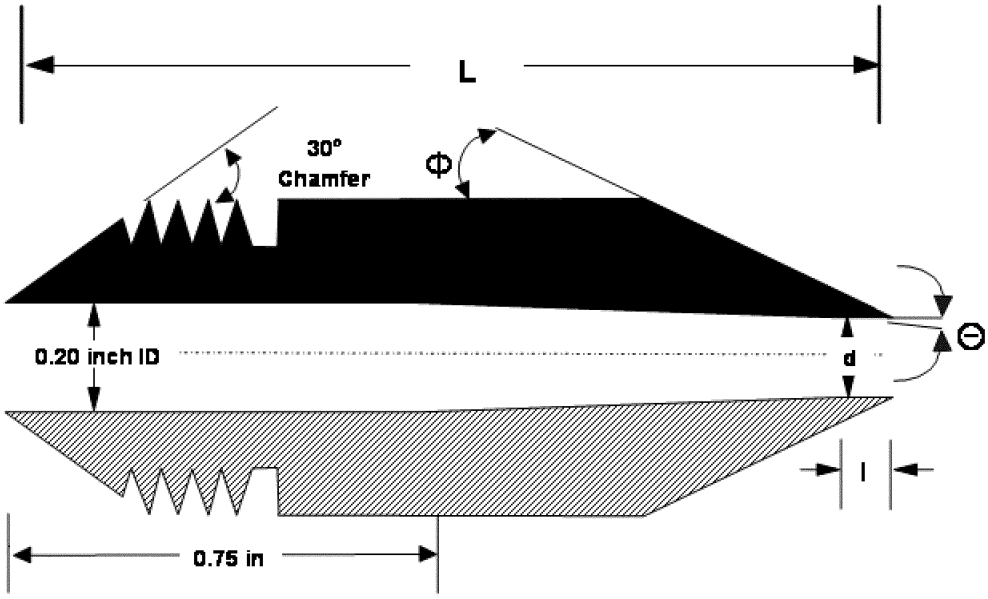

Nozzle Diameter, d (inches)	Internal Cone Angle, θ (degrees)	Outside Taper, Φ (degrees)	Straight Inlet Length, l (inches)	Total Length, L (inches)
0.125	3	15	≤ 0.05	1.45 ± 0.05
0.138	2	15	≤ 0.05	1.45 ± 0.05
0.156	1	15	≤ 0.05	1.45 ± 0.05
0.172	1	15	≤ 0.05	1.45 ± 0.05
0.188	1	15	≤ 0.05	1.45 ± 0.05
0.200	0	15	≤ 0.05	1.45 ± 0.05

Figure 4A. Nozzle Design for $PM_{2.5}$ Cyclone (Higher Stack Flow)

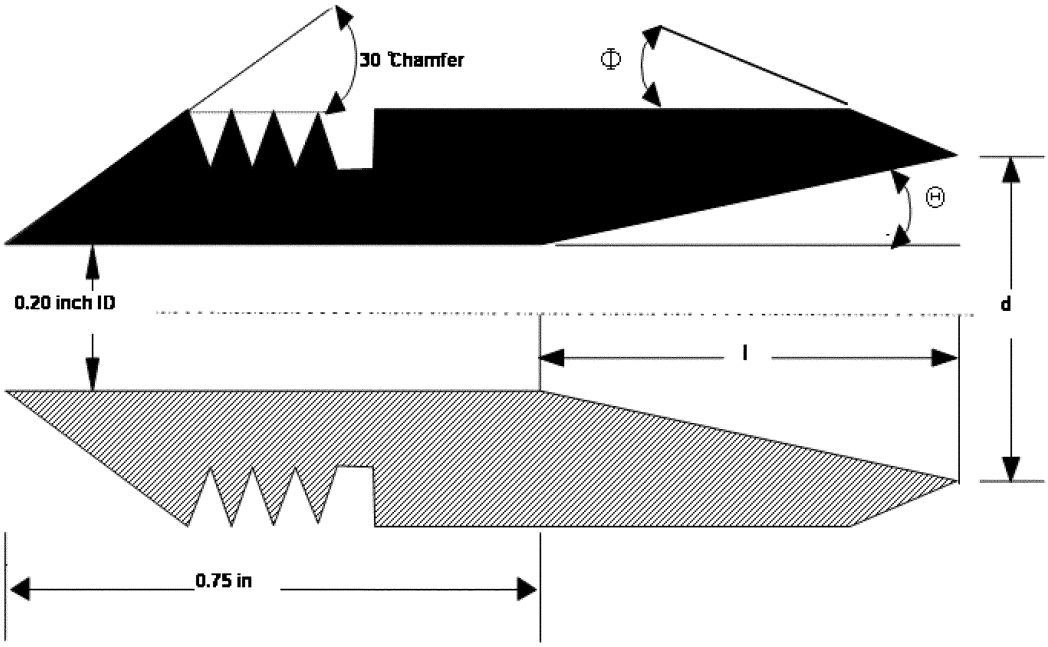

Nozzle diameter, d (inches)	Cone Angle, θ (degrees)	Outside taper, Φ (degrees)	Internal Taper length, l (inches)
0.216	5	15	0.093
0.234	5	15	0.194
0.253	5	15	0.304
0.274	5	15	0.422
0.296	5	15	0.549
0.320	5	15	0.688

Figure 4B. Nozzle Design for $PM_{2.5}$ Cyclone (Lower Stack Flow)

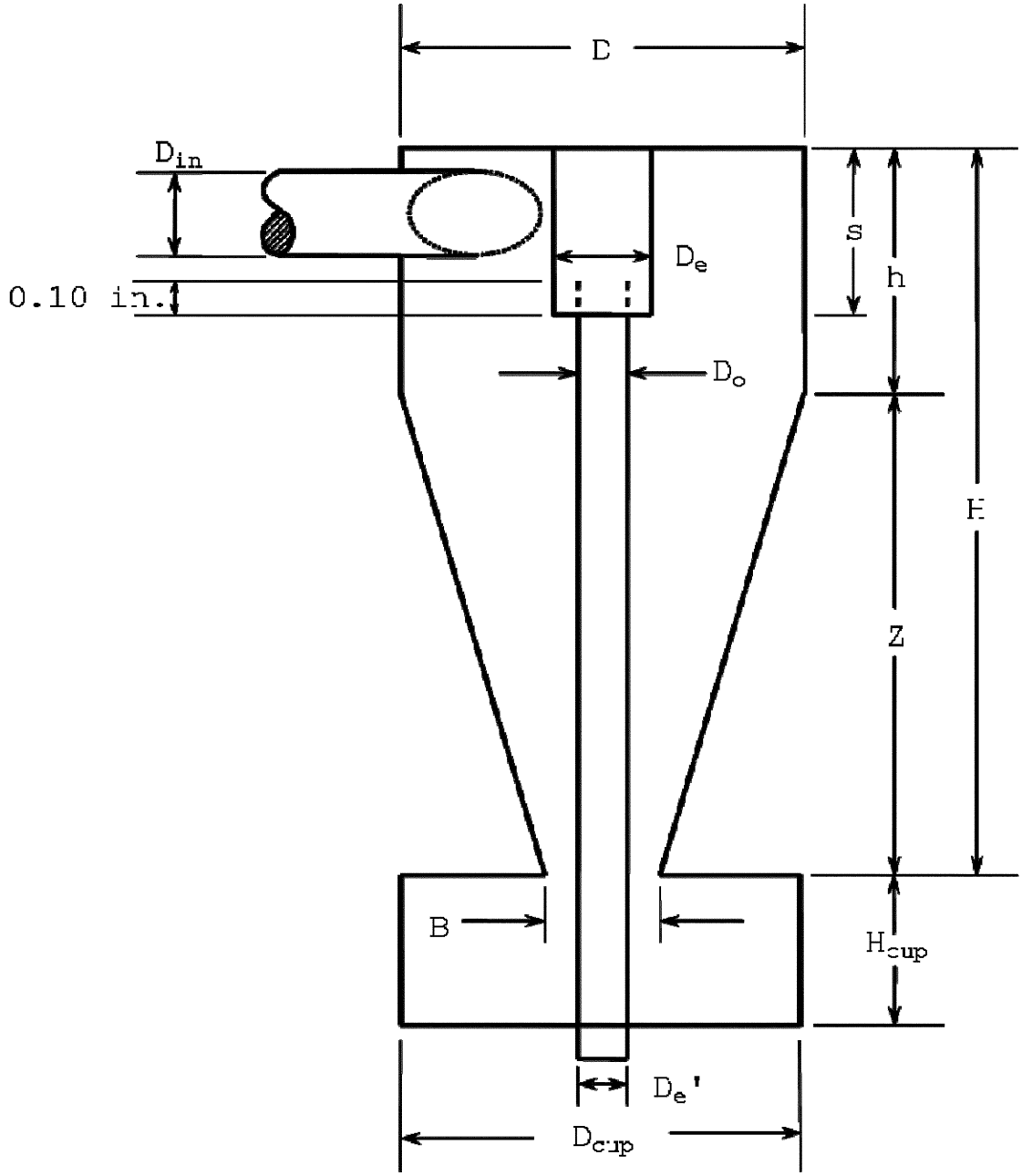

Cyclone I (10 Micrometer)	Cyclone Interior Dimensions (cm ± 0.02 cm)											
	D_{in}	D	D_e	B	H	h	Z	S	H_{cup}	D_{cup}	D_e'	D_o
	1.27	4.47	1.50	1.88	6.95	2.24	4.71	1.57	2.25	4.45	1.02	1.24

Figure 5. Design Specifications for Cyclone I (10 Micrometer)

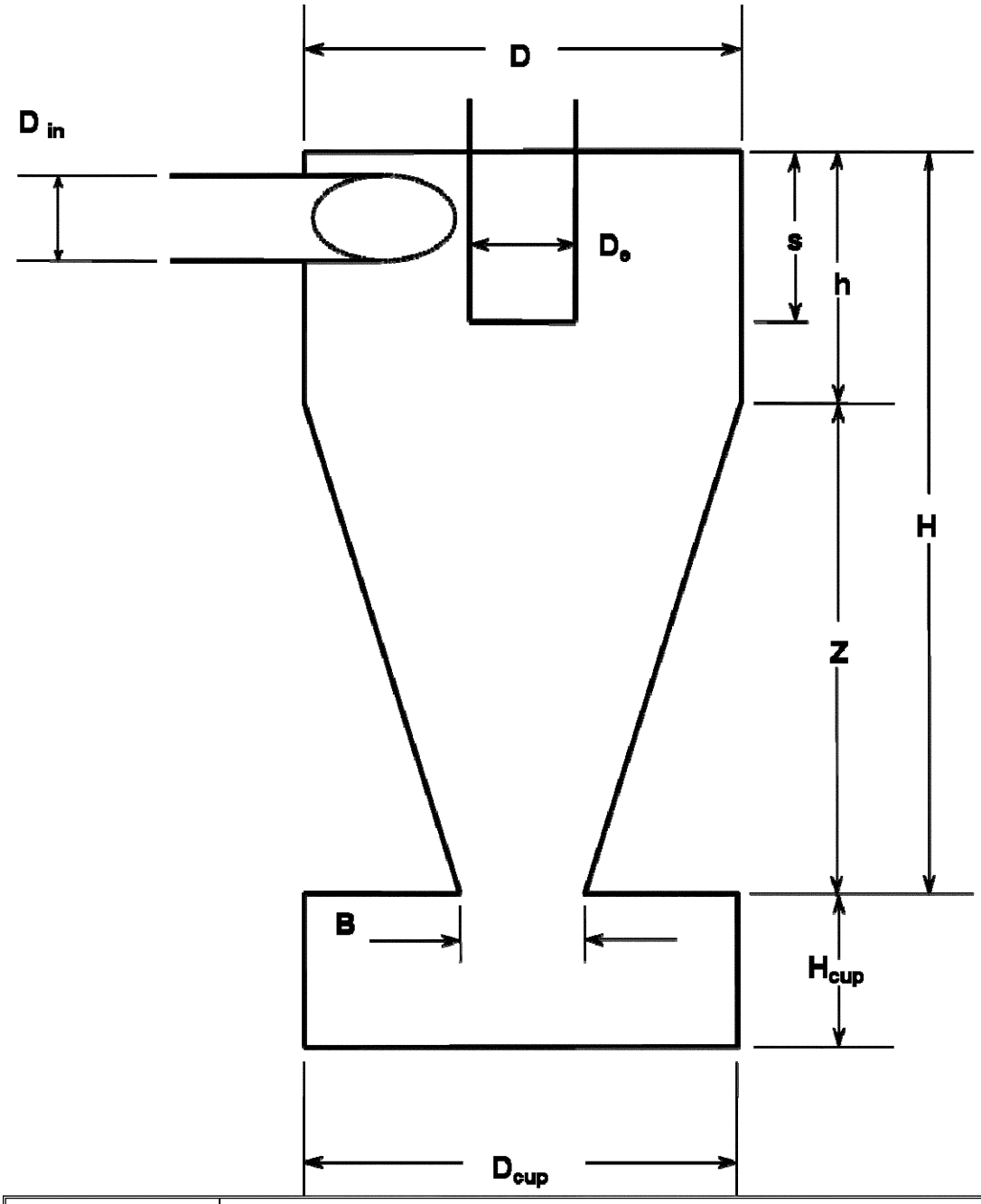

Cyclone IV (2.5 Micrometer)	Cyclone Interior Dimensions (cm ± 0.02 cm)									
	D_{in}	D	De	B	H	h	Z	S	H_{cup}	D_{cup}
	0.51	2.54	0.59	1.09	2.68	1.03	1.65	0.58	2.22	2.62

Figure 6. Design Specifications for Cyclone IV (2.5 Micrometer) Sizing Device

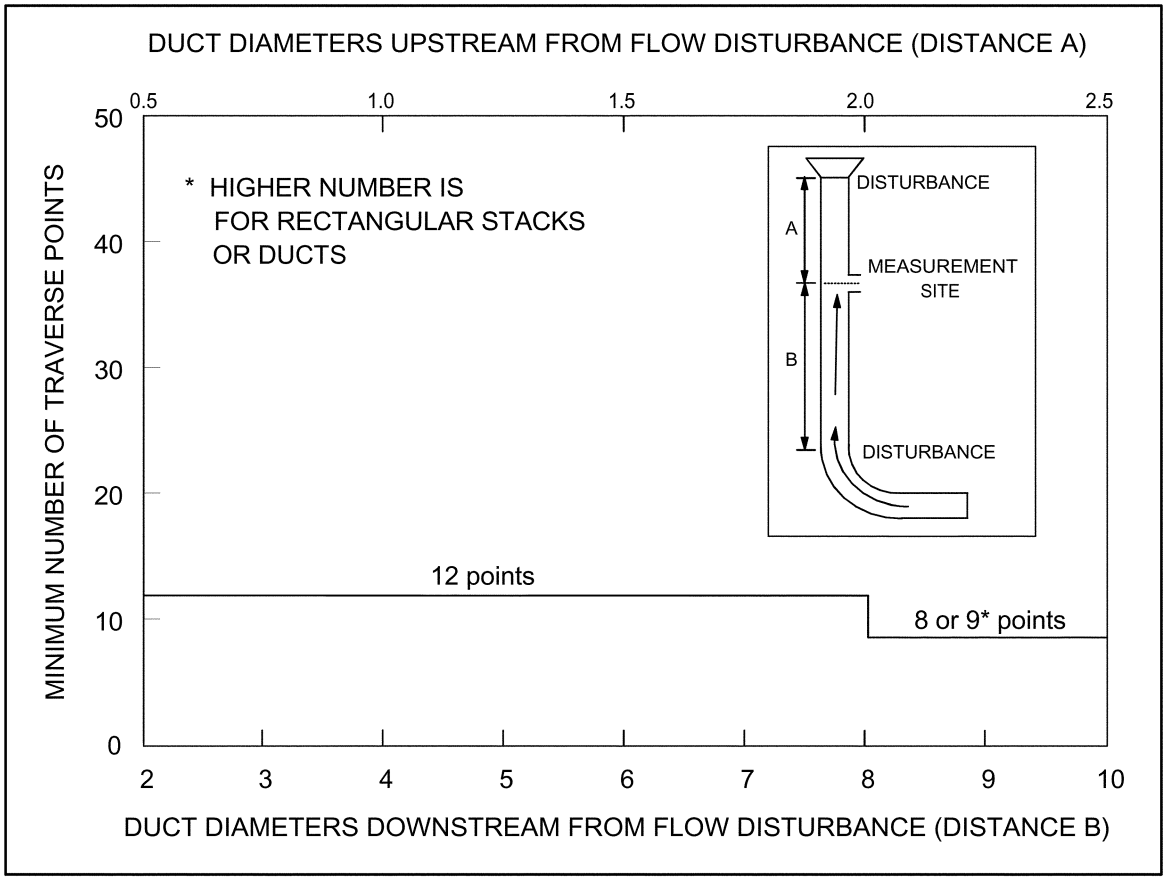

Figure 7. Minimum Number of Traverse Points for Preliminary Method 4 Traverse

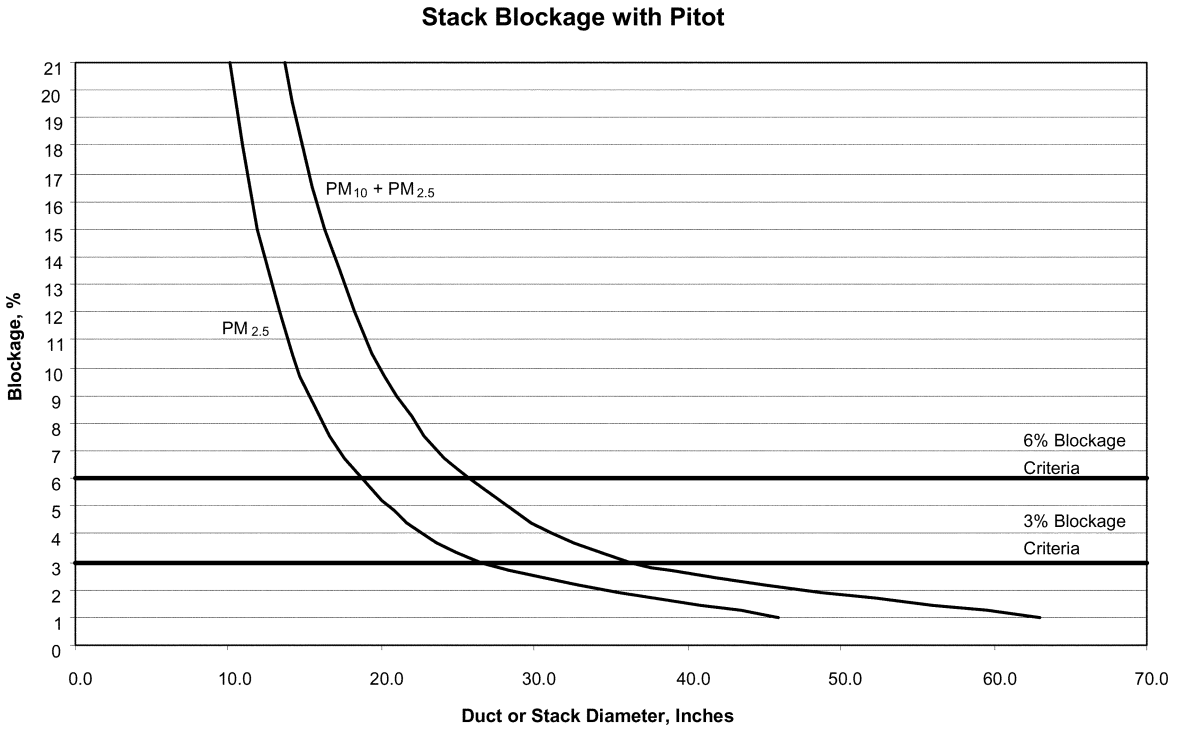

Figure 8. Gas Flow Blockage by the Sampling Heads with the Pitot Tube

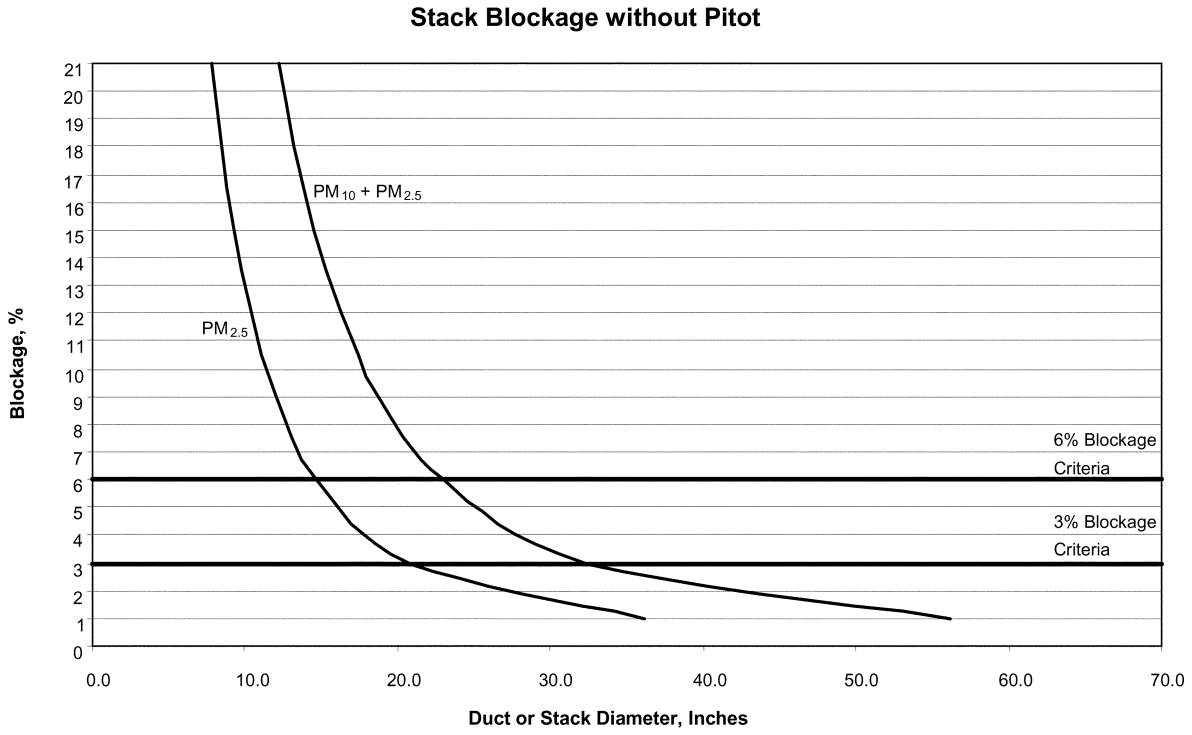

Figure 9. Gas Flow Blockage by the Sampling Heads without the Pitot Tube

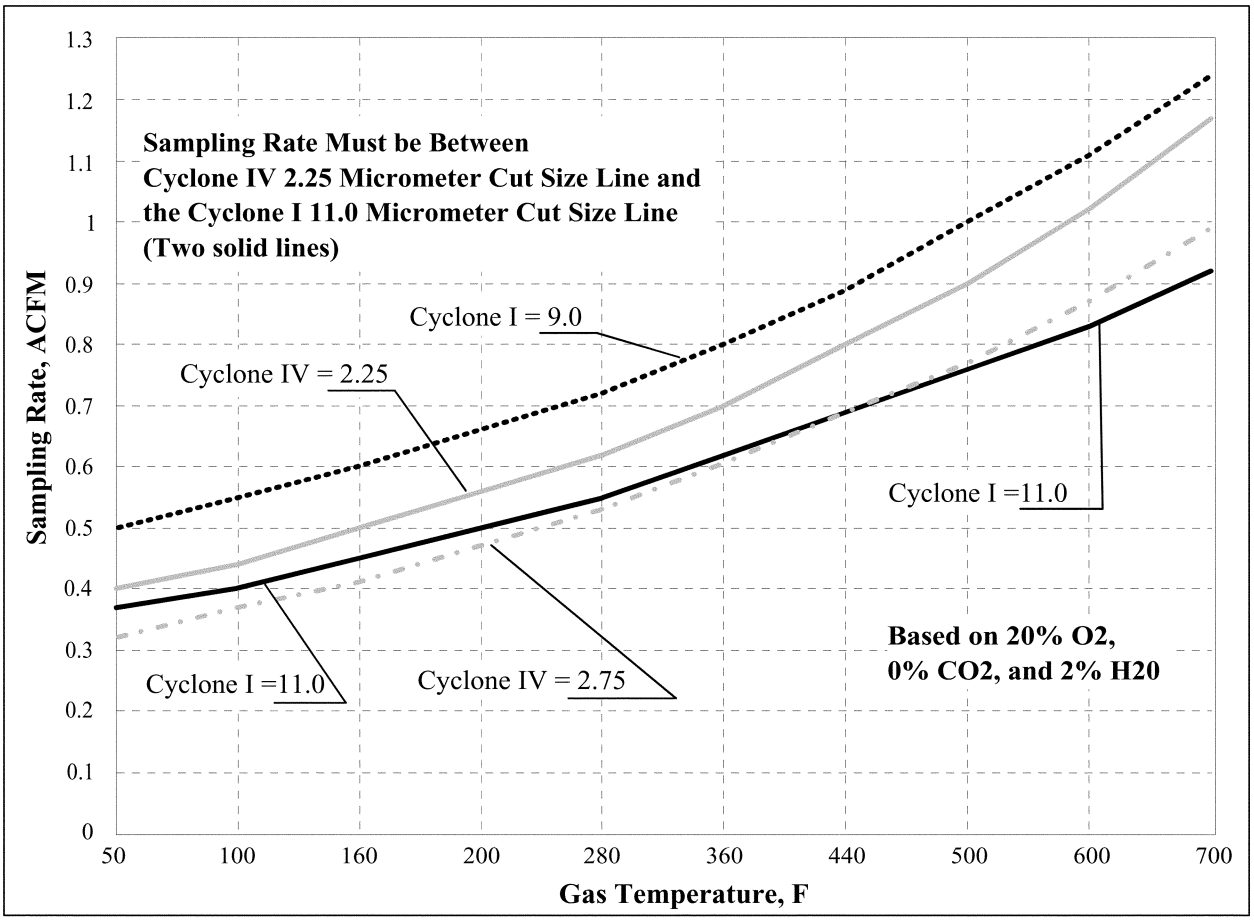

Figure 10. Acceptable Sampling Rate for Combined Cyclone Heads

BILLING CODE 6560–50–C

Method 202—Dry Impinger Method for Determining Condensable Particulate Emissions From Stationary Sources

1.0 Scope and Applicability

1.1 Scope. The U.S. Environmental Protection Agency (U.S. EPA or "we") developed this method to describe the procedures that the stack tester ("you") must follow to measure condensable particulate matter (CPM) emissions from stationary sources. This method includes procedures for measuring both organic and inorganic CPM.

1.2 Applicability. This method addresses the equipment, preparation, and analysis necessary to measure only CPM. You can use this method only for stationary source emission measurements. You can use this method to measure CPM from stationary source emissions after filterable particulate matter (PM) has been removed. CPM is measured in the emissions after removal from the stack and after passing through a filter.

(a) If the gas filtration temperature exceeds 30 °C (85 °F) and you must measure both the filterable and condensable (material that condenses after passing through a filter) components of total primary (direct) PM emissions to the atmosphere, then you must combine the procedures in this method with the procedures in Method 201A of appendix M to this part for measuring filterable PM. However, if the gas filtration temperature never exceeds 30 °C (85 °F), then use of this method is not required to measure total primary PM.

(b) If Method 17 of appendix A–6 to part 60 is used in conjunction with this method and constant weight requirements for the in-stack filter cannot be met, the Method 17 filter and sampling nozzle rinse must be treated as described in Sections 8.5.4.4 and 11.2.1 of this method. (*See* Section 3.0 for a definition of constant weight.) Extracts resulting from the use of this procedure must be filtered to remove filter fragments before the filter is processed and weighed.

1.3 Responsibility. You are responsible for obtaining the equipment and supplies you will need to use this method. You should also develop your own procedures for following this method and any additional procedures to ensure accurate sampling and analytical measurements.

1.4 Additional Methods. To obtain reliable results, you should have a thorough knowledge of the following test methods that are found in appendices A–1 through A–3 and A–6 to part 60, and in appendix M to this part:

(a) Method 1—Sample and velocity traverses for stationary sources.

(b) Method 2—Determination of stack gas velocity and volumetric flow rate (Type S pitot tube).

(c) Method 3—Gas analysis for the determination of dry molecular weight.

(d) Method 4—Determination of moisture content in stack gases.

(e) Method 5—Determination of particulate matter emissions from stationary sources.

(f) Method 17—Determination of particulate matter emissions from stationary sources (in-stack filtration method).

(g) Method 201A—Determination of PM_{10} and $PM_{2.5}$ emissions from stationary sources (Constant sampling rate procedure).

(h) You will need additional test methods to measure filterable PM. You may use Method 5 (including Method 5A, 5D and 5I but not 5B, 5E, 5F, 5G, or 5H) of appendix A–3 to part 60, or Method 17 of appendix A–6 to part 60, or Method 201A of appendix M to this part to collect filterable PM from stationary sources with temperatures above 30 °C (85 °F) in conjunction with this method. However, if the gas filtration temperature never exceeds 30 °C (85 °F), then use of this method is not required to measure total primary PM.

1.5 Limitations. You can use this method to measure emissions in stacks that have entrained droplets only when this method is combined with a filterable PM test method that operates at high enough temperatures to cause water droplets sampled through the probe to become vaporous.

1.6 Conditions. You must maintain isokinetic sampling conditions to meet the requirements of the filterable PM test method used in conjunction with this method. You must sample at the required number of sampling points specified in Method 5 of appendix A–3 to part 60, Method 17 of appendix A–6 to part 60, or Method 201A of appendix M to this part. Also, if you are using this method as an alternative to a required performance test method, you must receive approval from the regulatory authority that established the requirement to use this test method prior to conducting the test.

2.0 Summary of Method

2.1 Summary. The CPM is collected in dry impingers after filterable PM has been collected on a filter maintained as specified in either Method 5 of appendix A–3 to part 60, Method 17 of appendix A–6 to part 60, or Method 201A of appendix M to this part. The organic and aqueous fractions of the impingers and an out-of-stack CPM filter are then taken to dryness and weighed. The total of the impinger fractions and the CPM filter represents the CPM. Compared to the version of Method 202 that was promulgated on December 17, 1991, this method eliminates the use of water as the collection media in impingers and includes the addition of a condenser followed by a water dropout impinger immediately after the final in-stack or heated filter. This method also includes the addition of one modified Greenburg Smith impinger (backup impinger) and a CPM filter following the water dropout impinger. Figure 1 of Section 18 presents the schematic of the sampling train configured with these changes.

2.1.1 Condensable PM. CPM is collected in the water dropout impinger, the modified Greenburg Smith impinger, and the CPM filter of the sampling train as described in this method. The impinger contents are purged with nitrogen immediately after sample collection to remove dissolved sulfur dioxide (SO_2) gases from the impinger. The CPM filter is extracted with water and hexane. The impinger solution is then extracted with hexane. The organic and aqueous fractions are dried and the residues are weighed. The total of the aqueous and organic fractions represents the CPM.

2.1.2 Dry Impinger and Additional Filter. The potential artifacts from SO_2 are reduced using a condenser and water dropout impinger to separate CPM from reactive gases. No water is added to the impingers prior to the start of sampling. To improve the collection efficiency of CPM, an additional filter (the "CPM filter") is placed between the second and third impingers.

3.0 Definitions

3.1 *Condensable PM (CPM)* means material that is vapor phase at stack conditions, but condenses and/or reacts upon cooling and dilution in the ambient air to form solid or liquid PM immediately after discharge from the stack. Note that all condensable PM is assumed to be in the $PM_{2.5}$ size fraction.

3.2 *Constant weight* means a difference of no more than 0.5 mg or one percent of total weight less tare weight, whichever is greater, between two consecutive weighings, with no less than six hours of desiccation time between weighings.

3.3 *Field Train Proof Blank.* A field train proof blank is recovered on site from a clean, fully-assembled sampling train prior to conducting the first emissions test.

3.4 *Filterable PM* means particles that are emitted directly by a source as a solid or liquid at stack or release conditions and captured on the filter of a stack test train.

3.5 *Primary PM* (also known as direct PM) means particles that enter the atmosphere as a direct emission from a stack or an open source. Primary PM comprises two components: filterable PM and condensable PM. These two PM components have no upper particle size limit.

3.6 *Primary $PM_{2.5}$* (also known as direct $PM_{2.5}$, total $PM_{2.5}$, $PM_{2.5}$, or combined filterable $PM_{2.5}$ and condensable PM) means PM with an aerodynamic diameter less than or equal to 2.5 micrometers. These solid particles are emitted directly from an air emissions source or activity, or are the gaseous emissions or liquid droplets from an air emissions source or activity that condense to form PM at ambient temperatures. Direct $PM_{2.5}$ emissions include elemental carbon, directly emitted organic carbon, directly emitted sulfate, directly emitted nitrate, and other inorganic particles (including but not limited to crustal material, metals, and sea salt).

3.7 *Primary PM_{10}* (also known as direct PM_{10}, total PM_{10}, PM_{10}, or the combination of filterable PM_{10} and condensable PM) means PM with an aerodynamic diameter equal to or less than 10 micrometers.

4.0 Interferences

[Reserved]

5.0 Safety

Disclaimer. Because the performance of this method may require the use of hazardous materials, operations, and equipment, you should develop a health and safety plan to ensure the safety of your employees who are on site conducting the particulate emission test. Your plan should conform with all applicable Occupational Safety and Health Administration, Mine Safety and Health Administration, and Department of Transportation regulatory requirements. Because of the unique situations at some facilities and because some facilities may have more stringent requirements than is required by State or federal laws, you may have to develop procedures to conform to the plant health and safety requirements.

6.0 Equipment and Supplies

The equipment used in the filterable particulate portion of the sampling train is described in Methods 5 and 17 of appendix A–1 through A–3 and A–6 to part 60 and Method 201A of appendix M to this part. The equipment used in the CPM portion of the train is described in this section.

6.1 Condensable Particulate Sampling Train Components. The sampling train for this method is used in addition to filterable particulate collection using Method 5 of appendix A–3 to part 60, Method 17 of appendix A–6 to part 60, or Method 201A of appendix M to this part. This method includes the following exceptions or additions:

6.1.1 Probe Extension and Liner. The probe extension between the filterable particulate filter and the condenser must be glass- or fluoropolymer-lined. Follow the specifications for the probe liner specified in Section 6.1.1.2 of Method 5 of appendix A–3 to part 60.

6.1.2 Condenser and Impingers. You must add the following components to the filterable particulate sampling train: A Method 23 type condenser as described in Section 2.1.2 of Method 23 of appendix A–8 to part 60, followed by a water dropout impinger or flask, followed by a modified Greenburg-Smith impinger (backup impinger) with an open tube tip as described in Section 6.1.1.8 of Method 5 of appendix A–3 to part 60.

6.1.3 CPM Filter Holder. The modified Greenburg-Smith impinger is followed by a filter holder that is either glass, stainless steel (316 or equivalent), or fluoropolymer-coated stainless steel. Commercial size filter holders are available depending on project requirements. Use a commercial filter holder capable of supporting 47 mm or greater diameter filters. Commercial size filter holders contain a fluoropolymer O-ring, stainless steel, ceramic or fluoropolymer filter support and a final fluoropolymer O-ring. A filter that meets the requirements specified in Section 7.1.1 may be placed behind the CPM filter to reduce the pressure drop across the CPM filter. This support filter is not part of the PM sample and is not recovered with the CPM filter. At the exit of the CPM filter, install a fluoropolymer-coated or stainless steel encased thermocouple that is in contact with the gas stream.

6.1.4 Long Stem Impinger Insert. You will need a long stem modified Greenburg Smith impinger insert for the water dropout impinger to perform the nitrogen purge of the sampling train.

6.2 Sample Recovery Equipment.

6.2.1 Condensable PM Recovery. Use the following equipment to quantitatively determine the amount of CPM recovered from the sampling train.

(a) Nitrogen purge line. You must use inert tubing and fittings capable of delivering at least 14 liters/min of nitrogen gas to the impinger train from a standard gas cylinder (*see* Figures 2 and 3 of Section 18). You may use standard 0.6 centimeters (¼ inch) tubing and compression fittings in conjunction with an adjustable pressure regulator and needle valve.

(b) Rotameter. You must use a rotameter capable of measuring gas flow up to 20 L/min. The rotameter must be accurate to five percent of full scale.

(c) Nitrogen gas purging system. Compressed ultra-pure nitrogen, regulator, and filter must be capable of providing at

least 14 L/min purge gas for one hour through the sampling train.

(d) Amber glass bottles (500 ml).

6.2.2 Analysis Equipment. The following equipment is necessary for CPM sample analysis:

(a) Separatory Funnel. Glass, 1 liter.

(b) Weighing Tins. 50 ml. Glass evaporation vials, fluoropolymer beaker liners, or aluminum weighing tins can be used.

(c) Glass Beakers. 300 to 500 ml.

(d) Drying Equipment. A desiccator containing anhydrous calcium sulfate that is maintained below 10 percent relative humidity, and a hot plate or oven equipped with temperature control.

(e) Glass Pipets. 5 ml.

(f) Burette. Glass, 0 to 100 ml in 0.1 ml graduations.

(g) Analytical Balance. Analytical balance capable of weighing at least 0.0001 g (0.1 mg).

(h) pH Meter or Colormetric pH Indicator. The pH meter or colormetric pH indicator (e.g., phenolphthalein) must be capable of determining the acidity of liquid within 0.1 pH units.

(i) Sonication Device. The device must have a minimum sonication frequency of 20 kHz and be approximately four to six inches deep to accommodate the sample extractor tube.

(j) Leak-Proof Sample Containers. Containers used for sample and blank recovery must not contribute more than 0.05 mg of residual mass to the CPM measurements.

(k) Wash bottles. Any container material is acceptable, but wash bottles used for sample and blank recovery must not contribute more than 0.1 mg of residual mass to the CPM measurements.

7.0 Reagents and Standards

7.1 Sample Collection. To collect a sample, you will need a CPM filter, crushed ice, and silica gel. You must also have water and nitrogen gas to purge the sampling train. You will find additional information on each of these items in the following summaries.

7.1.1 CPM Filter. You must use a nonreactive, nondisintegrating polymer filter that does not have an organic binder and does not contribute more than 0.5 mg of residual mass to the CPM measurements. The CPM filter must also have an efficiency of at least 99.95 percent (less than 0.05 percent penetration) on 0.3 micrometer dioctyl phthalate particles. You may use test data from the supplier's quality control program to document the CPM filter efficiency.

7.1.2 Silica Gel. Use an indicating-type silica gel of six to 16 mesh. You must obtain approval of the Administrator for other types of desiccants (equivalent or better) before you use them. Allow the silica gel to dry for two hours at 175 °C (350 °F) if it is being reused. You do not have to dry new silica gel if the indicator shows the silica gel is active for moisture collection.

7.1.3 Water. Use deionized, ultra-filtered water that contains 1.0 parts per million by weight (ppmw) (1 mg/L) residual mass or less to recover and extract samples.

7.1.4 Crushed Ice. Obtain from the best readily available source.

7.1.5 Nitrogen Gas. Use Ultra-High Purity compressed nitrogen or equivalent to purge the sampling train. The compressed nitrogen you use to purge the sampling train must contain no more than 1 parts per million by volume (ppmv) oxygen, 1 ppmv total hydrocarbons as carbon, and 2 ppmv moisture. The compressed nitrogen must not contribute more than 0.1 mg of residual mass per purge.

7.2 Sample Recovery and Analytical Reagents. You will need acetone, hexane, anhydrous calcium sulfate, ammonia hydroxide, and deionized water for the sample recovery and analysis. Unless otherwise indicated, all reagents must conform to the specifications established by the Committee on Analytical Reagents of the American Chemical Society. If such specifications are not available, then use the best available grade. Additional information on each of these items is in the following paragraphs:

7.2.1 Acetone. Use acetone that is stored in a glass bottle. Do not use acetone from a metal container because it normally produces a high residual mass in the laboratory and field reagent blanks. You must use acetone that has a blank value less than 1.0 ppmw (0.1 mg/100 ml) residue.

7.2.2 Hexane, American Chemical Society grade. You must use hexane that has a blank residual mass value less than 1.0 ppmw (0.1 mg/100 ml) residue.

7.2.3 Water. Use deionized, ultra-filtered water that contains 1 ppmw (1 mg/L) residual mass or less to recover material caught in the impinger.

7.2.4 Condensable Particulate Sample Desiccant. Use indicating-type anhydrous calcium sulfate to desiccate water and organic extract residue samples prior to weighing.

7.2.5 Ammonium Hydroxide. Use National Institute of Standards and Technology-traceable or equivalent (0.1 N) NH_4OH.

7.2.6 Standard Buffer Solutions. Use one buffer solution with a neutral pH and a second buffer solution with an acid pH of no less than 4.

8.0 Sample Collection, Preservation, Storage, and Transport

8.1 Qualifications. This is a complex test method. To obtain reliable results, you should be trained and experienced with in-stack filtration systems (such as, cyclones, impactors, and thimbles) and impinger and moisture train systems.

8.2 Preparations. You must clean all glassware used to collect and analyze samples prior to field tests as described in Section 8.4 prior to use. Cleaned glassware must be used at the start of each new source category tested at a single facility. Analyze laboratory reagent blanks (water, acetone, and hexane) before field tests to verify low blank concentrations. Follow the pretest preparation instructions in Section 8.1 of Method 5.

8.3 Site Setup. You must follow the procedures required in Methods 5, 17, or 201A, whichever is applicable to your test requirements including:

(a) Determining the sampling site location and traverse points.

(b) Calculating probe/cyclone blockage (as appropriate).

(c) Verifying the absence of cyclonic flow.

(d) Completing a preliminary velocity profile, and selecting a nozzle(s) and sampling rate.

8.3.1 Sampling Site Location. Follow the standard procedures in Method 1 of appendix A–1 to part 60 to select the appropriate sampling site. Choose a location that maximizes the distance from upstream and downstream flow disturbances.

8.3.2 Traverse points. Use the required number of traverse points at any location, as found in Methods 5, 17, or 201A, whichever is applicable to your test requirements. You must prevent the disturbance and capture of any solids accumulated on the inner wall surfaces by maintaining a 1-inch distance from the stack wall (0.5 inch for sampling locations less than 24 inches in diameter).

8.4 Sampling Train Preparation. A schematic of the sampling train used in this method is shown in Figure 1 of Section 18. All glassware that is used to collect and analyze samples must be cleaned prior to the test with soap and water, and rinsed using tap water, deionized water, acetone, and finally, hexane. It is important to completely remove all silicone grease from areas that will be exposed to the hexane rinse during sample recovery. After cleaning, you must bake glassware at 300 °C for six hours prior to beginning tests at each source category sampled at a facility. As an alternative to baking glassware, a field train proof blank, as specified in Section 8.5.4.10, can be performed on the sampling train glassware that is used to collect CPM samples. Prior to each sampling run, the train glassware used to collect condensable PM must be rinsed thoroughly with deionized, ultra-filtered water that that contains 1 ppmw (1 mg/L) residual mass or less.

8.4.1 Condenser and Water Dropout Impinger. Add a Method 23 type condenser and a condensate dropout impinger without bubbler tube after the final probe extension that connects the in-stack or out-of-stack hot filter assembly with the CPM sampling train. The Method 23 type stack gas condenser is described in Section 2.1.2 of Method 23. The condenser must be capable of cooling the stack gas to less than or equal to 30 °C (85 °F).

8.4.2 Backup Impinger. The water dropout impinger is followed by a modified Greenburg Smith impinger (backup impinger) with no taper (see Figure 1 of Section 18). Place the water dropout and backup impingers in an insulated box with water at less than or equal to 30 °C (less than or equal to 85 °F). At the start of the tests, the water dropout and backup impingers must be clean, without any water or reagent added.

8.4.3 CPM Filter. Place a filter holder with a filter meeting the requirements in Section 7.1.1 after the backup impinger. The connection between the CPM filter and the moisture trap impinger must include a thermocouple fitting that provides a leak-free seal between the thermocouple and the stack gas. (**Note:** A thermocouple well is not sufficient for this purpose because the fluoropolymer- or steel-encased thermocouple must be in contact with the sample gas.)

8.4.4 Moisture Traps. You must use a modified Greenburg-Smith impinger containing 100 ml of water, or the alternative described in Method 5 of appendix A–3 to part 60, followed by an impinger containing silica gel to collect moisture that passes through the CPM filter. You must maintain the gas temperature below 20 °C (68 °F) at the exit of the moisture traps.

8.4.5 Silica Gel Trap. Place 200 to 300 g of silica gel in each of several air-tight containers. Weigh each container, including silica gel, to the nearest 0.5 g, and record this weight on the filterable particulate data sheet. As an alternative, the silica gel need not be preweighed, but may be weighed directly in its impinger or sampling holder just prior to train assembly.

8.4.6 Leak-Check (Pretest). Use the procedures outlined in Method 5 of appendix A–3 to part 60, Method 17 of appendix A–6 to part 60, or Method 201A of appendix M to this part as appropriate to leak check the entire sampling system. Specifically, perform the following procedures:

8.4.6.1 Sampling train. You must pretest the entire sampling train for leaks. The pretest leak-check must have a leak rate of not more than 0.02 actual cubic feet per minute or 4 percent of the average sample flow during the test run, whichever is less. Additionally, you must conduct the leak-check at a vacuum equal to or greater than the vacuum anticipated during the test run. Enter the leak-check results on the field test data sheet for the filterable particulate method. (**Note:** Conduct leak-checks during port changes only as allowed by the filterable particulate method used with this method.)

8.4.6.2 Pitot tube assembly. After you leak-check the sample train, perform a leak-check of the pitot tube assembly. Follow the procedures outlined in Section 8.4.1 of Method 5.

8.5 Sampling Train Operation. Operate the sampling train as described in the filterable particulate sampling method (*i.e.,* Method 5 of appendix A–3 to part 60, Method 17 of appendix A–6 to part 60, or Method 201A of appendix M to this part) with the following additions or exceptions:

8.5.1 CPM Filter Assembly. On the field data sheet for the filterable particulate method, record the CPM filter temperature readings at the beginning of each sample time increment and when sampling is halted. Maintain the CPM filter greater than 20 °C (greater than 65 °F) but less than or equal to 30 °C (less than or equal to 85 °F) during sample collection. (**Note:** Maintain the temperature of the CPM filter assembly as close to 30 °C (85 °F) as feasible.)

8.5.2 Leak-Check Probe/Sample Train Assembly (Post-Test). Conduct the leak rate check according to the filterable particulate sampling method used during sampling. If required, conduct the leak-check at a vacuum equal to or greater than the maximum vacuum achieved during the test run. If the leak rate of the sampling train exceeds 0.02 actual cubic feet per minute or four percent of the average sampling rate during the test run (whichever is less), then the run is invalid and you must repeat it.

8.5.3 Post-Test Nitrogen Purge. As soon as possible after the post-test leak-check, detach the probe, any cyclones, and in-stack or hot filters from the condenser and impinger train. If no water was collected before the CPM filter, then you may skip the remaining purge steps and proceed with sample recovery (see Section 8.5.4). You may purge the CPM sampling train using the sampling system meter box and vacuum pump or by passing nitrogen through the train under pressure. For either type of purge, you must first attach the nitrogen supply line to a purged inline filter.

8.5.3.1 If you choose to conduct a pressurized nitrogen purge on the complete CPM sampling train, you must quantitatively transfer the water collected in the condenser and the water dropout impinger to the backup impinger. You must measure the water combined in the backup impinger and record the volume or weight as part of the moisture collected during sampling as specified in Section 8.5.3.4.

(a) You must conduct the purge on the condenser, backup impinger, and CPM filter. If the tip of the backup impinger insert does not extend below the water level (including the water transferred from the first impinger), you must add a measured amount of degassed, deionized ultra-filtered water that contains 1 ppmw (1 mg/L) residual mass or less until the impinger tip is at least 1 centimeter below the surface of the water. You must record the amount of water added to the water dropout impinger (V_p) (*see* Figure 4 of Section 18) to correct the moisture content of the effluent gas. (**Note:** Prior to use, water must be degassed using a nitrogen purge bubbled through the water for at least 15 minutes to remove dissolved oxygen).

(b) To perform the nitrogen purge using positive pressure nitrogen flow, you must start with no flow of gas through the clean purge line and fittings. Connect the filter outlet to the input of the impinger train and disconnect the vacuum line from the exit of the silica moisture collection impinger (see Figure 3 of Section 18). You may purge only the CPM train by disconnecting the moisture train components if you measure moisture in the field prior to the nitrogen purge. You must increase the nitrogen flow gradually to avoid over-pressurizing the impinger array. You must purge the CPM train at a minimum of 14 liters per minute for at least one hour. At the conclusion of the purge, turn off the nitrogen delivery system.

8.5.3.2 If you choose to conduct a nitrogen purge on the complete CPM sampling train using the sampling system meter box and vacuum pump, replace the short stem impinger insert with a modified Greenberg Smith impinger insert. The impinger tip length must extend below the water level in the impinger catch.

(a) You must conduct the purge on the complete CPM sampling train starting at the inlet of the condenser. If insufficient water was collected, you must add a measured amount of degassed, deionized ultra-filtered water that contains 1 ppmw (1 mg/L) residual mass or less until the impinger tip is at least 1 centimeter below the surface of the water. You must record the amount of water added to the water dropout impinger (V_p) (see Figure 4 of Section 18) to correct the moisture content of the effluent gas. *(Note:* Prior to use, water must be degassed using a nitrogen purge bubbled through the water for at least 15 minutes to remove dissolved oxygen).

(b) You must start the purge using the sampling train vacuum pump with no flow of gas through the clean purge line and fittings. Connect the filter outlet to the input of the impinger train (see Figure 2 of Section 18). To avoid over- or under-pressurizing the impinger array, slowly commence the nitrogen gas flow through the line while simultaneously opening the meter box pump valve(s). Adjust the pump bypass and/or nitrogen delivery rates to obtain the following conditions: 14 liters/min or ΔH@ and a positive overflow rate through the rotameter of less than 2 liters/min. The presence of a positive overflow rate guarantees that the nitrogen delivery system is operating at greater than ambient pressure and prevents the possibility of passing ambient air (rather than nitrogen) through the impingers. Continue the purge under these conditions for at least one hour, checking the rotameter and ΔH@ value(s) at least every 15 minutes. At the conclusion of the purge, simultaneously turn off the delivery and pumping systems.

8.5.3.3 During either purge procedure, continue operation of the condenser recirculation pump, and heat or cool the water surrounding the first two impingers to maintain the gas temperature measured at the exit of the CPM filter greater than 20 °C (greater than 65 °F), but less than or equal to 30 °C (less than or equal to 85 °F). If the volume of liquid collected in the moisture traps has not been determined prior to conducting the nitrogen purge, maintain the temperature of the moisture traps following the CPM filter to prevent removal of moisture during the purge. If necessary, add more ice during the purge to maintain the gas temperature measured at the exit of the silica gel impinger below 20 °C (68 °F). Continue the purge under these conditions for at least one hour, checking the rotameter and ΔH@ value(s) periodically. At the conclusion of the purge, simultaneously turn off the delivery and pumping systems.

8.5.3.4 Weigh the liquid, or measure the volume of the liquid collected in the dropout, impingers, and silica trap if this has not been done prior to purging the sampling train. Measure the liquid in the water dropout impinger to within 1 ml using a clean graduated cylinder or by weighing it to within 0.5 g using a balance. Record the volume or weight of liquid present to be used to calculate the moisture content of the effluent gas in the field log notebook.

8.5.3.5 If a balance is available in the field, weigh the silica impinger to within 0.5 g. Note the color of the indicating silica gel in the last impinger to determine whether it has been completely spent, and make a notation of its condition in the field log notebook.

8.5.4 Sample Recovery.

8.5.4.1 *Recovery of filterable PM.* Recovery of filterable PM involves the quantitative transfer of particles according to the filterable particulate sampling method (i.e., Method 5 of appendix A–3 to part 60,

Method 17 of appendix A–6 to part 60, or Method 201A of appendix M to this part).

8.5.4.2 *CPM Container #1, Aqueous liquid impinger contents.* Quantitatively transfer liquid from the dropout and the backup impingers prior to the CPM filter into a clean, leak-proof container labeled with test identification and "CPM Container #1, Aqueous Liquid Impinger Contents." Rinse all sampling train components including the back half of the filterable PM filter holder, the probe extension, condenser, each impinger and the connecting glassware, and the front half of the CPM filter housing twice with water. Recover the rinse water, and add it to CPM Container #1. Mark the liquid level on the container.

8.5.4.3 *CPM Container #2, Organic rinses.* Follow the water rinses of the probe extension, condenser, each impinger and all of the connecting glassware and front half of the CPM filter with an acetone rinse. Recover the acetone rinse into a clean, leak-proof container labeled with test identification and "CPM Container #2, Organic Rinses." Then repeat the entire rinse procedure with two rinses of hexane, and save the hexane rinses in the same container as the acetone rinse (CPM Container #2). Mark the liquid level on the jar.

8.5.4.4 *CPM Container #3, CPM filter sample.* Use tweezers and/or clean disposable surgical gloves to remove the filter from the CPM filter holder. Place the filter in the Petri dish labeled with test identification and "CPM Container #3, Filter Sample."

8.5.4.5 *CPM Container #4, Cold impinger water.* You must weigh or measure the volume of the contents of CPM Container #4 either in the field or during sample analysis (*see* Section 11.2.4). If the water from the cold impinger has been weighed in the field, it can be discarded. Otherwise, quantitatively transfer liquid from the cold impinger that follows the CPM filter into a clean, leak-proof container labeled with test identification and "CPM Container #4, Cold Water Impinger." Mark the liquid level on the container. CPM Container #4 holds the remainder of the liquid water from the emission gases.

8.5.4.6 *CPM Container #5, Silica gel absorbent.* You must weigh the contents of CPM Container #5 in the field or during sample analysis (see Section 11.2.5). If the silica gel has been weighed in the field to measure water content, then it can be discarded or recovered for reuse. Otherwise, transfer the silica gel to its original container labeled with test identification and "CPM Container #5, Silica Gel Absorbent" and seal. You may use a funnel to make it easier to pour the silica gel without spilling. You may also use a rubber policeman as an aid in removing the silica gel from the impinger. It is not necessary to remove the small amount of silica gel dust particles that may adhere to the impinger wall and are difficult to remove. Since the gain in weight is to be used for moisture calculations, do not use any water or other liquids to transfer the silica gel.

8.5.4.7 *CPM Container #6, Acetone field reagent blank.* Take approximately 200 ml of the acetone directly from the wash bottle you used for sample recovery and place it in a clean, leak-proof container labeled with test identification and "CPM Container #6, Acetone Field Reagent Blank" (*see* Section 11.2.6 for analysis). Mark the liquid level on the container. Collect one acetone field reagent blank from the lot(s) of solvent used for the test.

8.5.4.8 *CPM Container #7, Water field reagent blank.* Take approximately 200 ml of the water directly from the wash bottle you used for sample recovery and place it in a clean, leak-proof container labeled with test identification and "CPM Container #7, Water Field Reagent Blank" (*see* Section 11.2.7 for analysis). Mark the liquid level on the container. Collect one water field reagent blank from the lot(s) of water used for the test.

8.5.4.9 *CPM Container #8, Hexane field reagent blank.* Take approximately 200 ml of the hexane directly from the wash bottle you used for sample recovery and place it in a clean, leak-proof container labeled with test identification and "CPM Container #8, Hexane Field Reagent Blank" (*see* Section 11.2.8 for analysis). Mark the liquid level on the container. Collect one hexane field reagent blank from the lot(s) of solvent used for the test.

8.5.4.10 *Field train proof blank.* If you did not bake the sampling train glassware as specified in Section 8.4, you must conduct a field train proof blank as specified in Sections 8.5.4.11 and 8.5.4.12 to demonstrate the cleanliness of sampling train glassware.

8.5.4.11 *CPM Container #9, Field train proof blank, inorganic rinses.* Prior to conducting the emission test, rinse the probe extension, condenser, each impinger and the connecting glassware, and the front half of the CPM filter housing twice with water. Recover the rinse water and place it in a clean, leak-proof container labeled with test identification and "CPM Container #9, Field Train Proof Blank, Inorganic Rinses." Mark the liquid level on the container.

8.5.4.12 *CPM Container #10, Field train proof blank, organic rinses.* Follow the water rinse of the probe extension, condenser, each impinger and the connecting glassware, and the front half of the CPM filter housing with an acetone rinse. Recover the acetone rinse into a clean, leak-proof container labeled with test identification and "CPM Container #10, Field Train Proof Blank, Organic Rinses." Then repeat the entire rinse procedure with two rinses of hexane and save the hexane rinses in the same container as the acetone rinse (CPM Container #10). Mark the liquid level on the container.

8.5.5 Transport procedures. Containers must remain in an upright position at all times during shipping. You do not have to ship the containers under dry or blue ice. However, samples must be maintained at or below 30 °C (85 °F) during shipping.

9.0 Quality Control

9.1 Daily Quality Checks. You must perform daily quality checks of field log notebooks and data entries and calculations using data quality indicators from this method and your site-specific test plan. You must review and evaluate recorded and transferred raw data, calculations, and documentation of testing procedures. You must initial or sign log notebook pages and data entry forms that were reviewed.

9.2 Calculation Verification. Verify the calculations by independent, manual checks. You must flag any suspect data and identify the nature of the problem and potential effect on data quality. After you complete the test, prepare a data summary and compile all the calculations and raw data sheets.

9.3 Conditions. You must document data and information on the process unit tested, the particulate control system used to control emissions, any non-particulate control system that may affect particulate emissions, the sampling train conditions, and weather conditions. Discontinue the test if the operating conditions may cause non-representative particulate emissions.

9.4 Field Analytical Balance Calibration Check. Perform calibration check procedures on field analytical balances each day that they are used. You must use National Institute of Standards and Technology (NIST)-traceable weights at a mass approximately equal to the weight of the sample plus container you will weigh.

9.5 Glassware. Use class A volumetric glassware for titrations, or calibrate your equipment against NIST-traceable glassware.

9.6 Laboratory Analytical Balance Calibration Check. Check the calibration of your laboratory analytical balance each day that you weigh CPM samples. You must use NIST Class S weights at a mass approximately equal to the weight of the sample plus container you will weigh.

9.7 Laboratory Reagent Blanks. You should run blanks of water, acetone, and hexane used for field recovery and sample analysis. Analyze at least one sample (150 ml minimum) of each lot of reagents that you plan to use for sample recovery and analysis before you begin testing. These blanks are not required by the test method, but running blanks before field use is advisable to verify low blank concentrations, thereby reducing the potential for a high field blank on test samples.

9.8 Field Reagent Blanks. You should run at least one field reagent blank of water, acetone, and hexane you use for field recovery. These blanks are not required by the test method, but running independent field reagent blanks is advisable to verify that low blank concentrations were maintained during field solvent use and demonstrate that reagents have not been contaminated during field tests.

9.9 Field Train Proof Blank. If you are not baking glassware as specified in Section 8.4, you must recover a minimum of one field train proof blank for the sampling train used for testing each new source category at a single facility. You must assemble the sampling train as it will be used for testing. You must recover the field train proof blank samples as described in Section 8.5.4.11 and 8.5.4.12.

9.10 Field Train Recovery Blank. You must recover a minimum of one field train blank for each source category tested at the facility. You must recover the field train blank after the first or second run of the test. You must assemble the sampling train as it will be used for testing. Prior to the purge, you must add 100 ml of water to the first impinger and record this data on Figure 4. You must purge the assembled train as

described in Sections 8.5.3.2 and 8.5.3.3. You must recover field train blank samples as described in Section 8.5.4. From the field sample weight, you will subtract the condensable particulate mass you determine with this blank train or 0.002 g (2.0 mg), whichever is less.

10.0 Calibration and Standardization

Maintain a field log notebook of all condensable particulate sampling and analysis calibrations. Include copies of the relevant portions of the calibration and field logs in the final test report.

10.1 Thermocouple Calibration. You must calibrate the thermocouples using the procedures described in Section 10.3.1 of Method 2 of appendix A–1 to part 60 or Alternative Method 2, Thermocouple Calibration (ALT–011) (*http://www.epa.gov/ttn/emc*). Calibrate each temperature sensor at a minimum of three points over the anticipated range of use against a NIST-traceable thermometer. Alternatively, a reference thermocouple and potentiometer calibrated against NIST standards can be used.

10.2 Ammonium Hydroxide. The 0.1 N NH_4OH used for titrations in this method is made as follows: Add 7 ml of concentrated (14.8 M) NH_4OH to 1 liter of water. Standardize against standardized 0.1 N H_2SO_4, and calculate the exact normality using a procedure parallel to that described in Section 10.5 of Method 6 of appendix A–4 to 40 CFR part 60. Alternatively, purchase 0.1 N NH_4OH that has been standardized against a NIST reference material. Record the normality on the CPM Work Table (*see* Figure 6 of Section 18).

11.0 Analytical Procedures

11.1 Analytical Data Sheets. (a) Record the filterable particulate field data on the appropriate (i.e., Method 5, 17, or 201A) analytical data sheets. Alternatively, data may be recorded electronically using software applications such as the Electronic Reporting Tool available at *http://www.epa.gov/ttn/chief/ert/ert_tool.html.* Record the condensable particulate data on the CPM Work Table (*see* Figure 6 of Section 18).

(b) Measure the liquid in all containers either volumetrically to ± 1 ml or gravimetrically to ± 0.5 g. Confirm on the filterable particulate analytical data sheet whether leakage occurred during transport. If a noticeable amount of leakage has occurred, either void the sample or use methods (subject to the approval of the Administrator) to correct the final results.

11.2 Condensable PM Analysis. See the flow chart in Figure 7 of Section 18 for the steps to process and combine fractions from the CPM train.

11.2.1 Container #3, CPM Filter Sample. If the sample was collected by Method 17 or Method 201A with a stack temperature below 30 °C (85 °F) and the filter can be brought to a constant weight, transfer the filter and any loose PM from the sample container to a tared glass weighing dish. (*See* Section 3.0 for a definition of constant weight.) Desiccate the sample for 24 hours in a desiccator containing anhydrous calcium sulfate. Weigh to a constant weigh and report the results to the nearest 0.1 mg. If the filter cannot be brought to constant weight using this procedure, you must follow the extraction and weighing procedures in this section. (*See* Section 3.0 for a definition of constant weight.) Extract the filter recovered from the low-temperature portion of the train, and combine the extracts with the organic and inorganic fractions resulting from the aqueous impinger sample recovery in Containers 1 and 2, respectively. Extract the CPM filter as follows:

11.2.1.1 Extract the water soluble (aqueous or inorganic) CPM from the CPM filter by folding the filter in quarters and placing it into a 50-ml extraction tube. Add sufficient deionized, ultra-filtered water to cover the filter (e.g., 10 ml of water). Place the extractor tube into a sonication bath and extract the water-soluble material for a minimum of two minutes. Combine the aqueous extract with the contents of Container #1. Repeat this extraction step twice for a total of three extractions.

11.2.1.2 Extract the organic soluble CPM from the CPM filter by adding sufficient hexane to cover the filter (e.g., 10 ml of hexane). Place the extractor tube into a sonication bath and extract the organic soluble material for a minimum of two minutes. Combine the organic extract with the contents of Container #2. Repeat this extraction step twice for a total of three extractions.

11.2.2 CPM Container #1, Aqueous Liquid Impinger Contents. Analyze the water soluble CPM in Container 1 as described in this section. Place the contents of Container #1 into a separatory funnel. Add approximately 30 ml of hexane to the funnel, mix well, and drain off the lower organic phase. Repeat this procedure twice with 30 ml of hexane each time combining the organic phase from each extraction. Each time, leave a small amount of the organic/hexane phase in the separatory funnel, ensuring that no water is collected in the organic phase. This extraction should yield about 90 ml of organic extract. Combine the organic extract from Container #1 with the organic train rinse in Container 2.

11.2.2.1 Determine the inorganic fraction weight. Transfer the aqueous fraction from the extraction to a clean 500-ml or smaller beaker. Evaporate to no less than 10 ml liquid on a hot plate or in the oven at 105 °C and allow to dry at room temperature (not to exceed 30 °C (85 °F)). You must ensure that water and volatile acids have completely evaporated before neutralizing nonvolatile acids in the sample. Following evaporation, desiccate the residue for 24 hours in a desiccator containing anhydrous calcium sulfate. Weigh at intervals of at least six hours to a constant weight. (*See* Section 3.0 for a definition of Constant weight.) Report results to the nearest 0.1 mg on the CPM Work Table (*see* Figure 6 of Section 18) and proceed directly to Section 11.2.3. If the residue can not be weighed to constant weight, redissolve the residue in 100 ml of deionized distilled ultra-filtered water that contains 1 ppmw (1 mg/L) residual mass or less and continue to Section 11.2.2.2.

11.2.2.2 Use titration to neutralize acid in the sample and remove water of hydration. If used, calibrate the pH meter with the neutral and acid buffer solutions. Then titrate the sample with 0.1N NH_4OH to a pH of 7.0, as indicated by the pH meter or colorimetric indicator. Record the volume of titrant used on the CPM Work Table (*see* Figure 6 of Section 18).

11.2.2.3 Using a hot plate or an oven at 105 °C, evaporate the aqueous phase to approximately 10 ml. Quantitatively transfer the beaker contents to a clean, 50-ml pre-tared weighing tin and evaporate to dryness at room temperature (not to exceed 30 °C (85 °F)) and pressure in a laboratory hood. Following evaporation, desiccate the residue for 24 hours in a desiccator containing anhydrous calcium sulfate. Weigh at intervals of at least six hours to a constant weight. (*See* Section 3.0 for a definition of Constant weight.) Report results to the nearest 0.1 mg on the CPM Work Table (*see* Figure 6 of Section 18).

11.2.2.4 Calculate the correction factor to subtract the NH_4^+ retained in the sample using Equation 1 in Section 12.

11.2.3 CPM Container #2, Organic Fraction Weight Determination. Analyze the organic soluble CPM in Container #2 as described in this section. Place the organic phase in a clean glass beaker. Evaporate the organic extract at room temperature (not to exceed 30 °C (85 °F)) and pressure in a laboratory hood to not less than 10 ml. Quantitatively transfer the beaker contents to a clean 50-ml pre-tared weighing tin and evaporate to dryness at room temperature (not to exceed 30 °C (85 °F)) and pressure in a laboratory hood. Following evaporation, desiccate the organic fraction for 24 hours in a desiccator containing anhydrous calcium sulfate. Weigh at intervals of at least six hours to a constant weight (*i.e.,* less than or equal to 0.5 mg change from previous weighing), and report results to the nearest 0.1 mg on the CPM Work Table (*see* Figure 6 of Section 18).

11.2.4 CPM Container #4, Cold Impinger Water. If the amount of water has not been determined in the field, note the level of liquid in the container, and confirm on the filterable particulate analytical data sheet whether leakage occurred during transport. If a noticeable amount of leakage has occurred, either void the sample or use methods (subject to the approval of the Administrator) to correct the final results. Measure the liquid in Container #4 either volumetrically to ± 1 ml or gravimetrically to ± 0.5 g, and record the volume or weight on the filterable particulate analytical data sheet of the filterable PM test method.

11.2.5 CPM Container #5, Silica Gel Absorbent. Weigh the spent silica gel (or silica gel plus impinger) to the nearest 0.5 g using a balance. This step may be conducted in the field. Record the weight on the filterable particulate analytical data sheet of the filterable PM test method.

11.2.6 Container #6, Acetone Field Reagent Blank. Use 150 ml of acetone from the blank container used for this analysis. Transfer 150 ml of the acetone to a clean 250-ml beaker. Evaporate the acetone at room temperature (not to exceed 30 °C (85 °F)) and pressure in a laboratory hood to approximately 10 ml. Quantitatively transfer

the beaker contents to a clean 50-ml pre-tared weighing tin, and evaporate to dryness at room temperature (not to exceed 30 °C (85 °F)) and pressure in a laboratory hood. Following evaporation, desiccate the residue for 24 hours in a desiccator containing anhydrous calcium sulfate. Weigh at intervals of at least six hours to a constant weight (i.e., less than or equal to 0.5 mg change from previous weighing), and report results to the nearest 0.1 mg on Figure 4 of Section 19.

11.2.7 Water Field Reagent Blank, Container #7. Use 150 ml of the water from the blank container for this analysis. Transfer the water to a clean 250-ml beaker, and evaporate to approximately 10 ml liquid in the oven at 105 °C. Quantitatively transfer the beaker contents to a clean 50 ml pre-tared weighing tin and evaporate to dryness at room temperature (not to exceed 30 °C (85 °F)) and pressure in a laboratory hood. Following evaporation, desiccate the residue for 24 hours in a desiccator containing anhydrous calcium sulfate. Weigh at intervals of at least six hours to a constant weight (*i.e.,* less than or equal to 0.5 mg change from previous weighing) and report results to the nearest 0.1 mg on Figure 4 of Section 18.

11.2.8 Hexane Field Reagent Blank, Container #8. Use 150 ml of hexane from the blank container for this analysis. Transfer 150 ml of the hexane to a clean 250-ml beaker. Evaporate the hexane at room temperature (not to exceed 30 °C (85 °F)) and pressure in a laboratory hood to approximately 10 ml. Quantitatively transfer the beaker contents to a clean 50-ml pre-tared weighing tin and evaporate to dryness at room temperature (not to exceed 30 °C (85 °F)) and pressure in a laboratory hood. Following evaporation, desiccate the residue for 24 hours in a desiccator containing anhydrous calcium sulfate. Weigh at intervals of at least six hours to a constant weight (i.e., less than or equal to 0.5 mg change from previous weighing), and report results to the nearest 0.1 mg on Figure 4 of Section 18.

12.0 Calculations and Data Analysis

12.1 Nomenclature. Report results in International System of Units (SI units) unless the regulatory authority for testing specifies English units. The following nomenclature is used.

$\Delta H_@$ = Pressure drop across orifice at flow rate of 0.75 SCFM at standard conditions, inches of water column (**Note:** Specific to each orifice and meter box).

17.03 = mg/milliequivalents for ammonium ion.

ACFM = Actual cubic feet per minute.

C_{cpm} = Concentration of the condensable PM in the stack gas, dry basis, corrected to standard conditions, milligrams/dry standard cubic foot.

m_c = Mass of the NH_4^+ added to sample to form ammonium sulfate, mg.

m_{cpm} = Mass of the total condensable PM, mg.

m_{fb} = Mass of total CPM in field train recovery blank, mg.

mg = Milligrams.

mg/L = Milligrams per liter.

m_i = Mass of inorganic CPM, mg.

m_{ib} = Mass of inorganic CPM in field train recovery blank, mg.

m_o = Mass of organic CPM, mg.

m_{ob} = Mass of organic CPM in field train blank, mg.

m_r = Mass of dried sample from inorganic fraction, mg.

N = Normality of ammonium hydroxide titrant.

ppmv = Parts per million by volume.

ppmw = Parts per million by weight.

$V_{m(std)}$ = Volume of gas sample measured by the dry gas meter, corrected to standard conditions, dry standard cubic meter (dscm) or dry standard cubic foot (dscf) as defined in Equation 5–1 of Method 5.

V_t = Volume of NH_4OH titrant, ml.

V_p = Volume of water added during train purge.

12.2 Calculations. Use the following equations to complete the calculations required in this test method. Enter the appropriate results from these calculations on the CPM Work Table (*see* Figure 6 of Section 18).

12.2.1 Mass of ammonia correction. Correction for ammonia added during titration of 100 ml aqueous CPM sample. This calculation assumes no waters of hydration.

$$m_c = 17.03 \times V_t \times N \qquad \text{(Eq. 1)}$$

12.2.2 Mass of the Field Train Recovery Blank (mg). Per Section 9.10, the mass of the field train recovery blank, m_{fb}, shall not exceed 2.0 mg.

$$m_{fb} = m_{ib} + m_{ob} \qquad \text{(Eq. 2)}$$

12.2.3 Mass of Inorganic CPM (mg).

$$m_i = m_r - m_c \qquad \text{(Eq. 3)}$$

12.2.4 Total Mass of CPM (mg).

$$m_{cpm} = m_i + m_o - m_{fb} \quad \text{(Eq. 4)}$$

12.2.5 Concentration of CPM (mg/dscf).

$$C_{cpm} = \frac{m_{cpm}}{V_{m(std)}} \quad \text{(Eq. 5)}$$

12.3 Emissions Test Report. You must prepare a test report following the guidance in EPA Guidance Document 043 (Preparation and Review of Test Reports. December 1998).

13.0 Method Performance

An EPA field evaluation of the revised Method 202 showed the following precision in the results: approximately 4 mg for total CPM, approximately 0.5 mg for organic CPM, and approximately 3.5 mg for inorganic CPM.

14.0 Pollution Prevention

[Reserved]

15.0 Waste Management

Solvent and water are evaporated in a laboratory hood during analysis. No liquid waste is generated in the performance of this method. Organic solvents used to clean sampling equipment should be managed as RCRA organic waste.

16.0 Alternative Procedures

Alternative Method 2, Thermocouple Calibration (ALT–011) for the thermocouple calibration can be found at *http://www.epa.gov/ttn/emc/approalt.html.*

17.0 References

(1) Commonwealth of Pennsylvania, Department of Environmental Resources. 1960. Chapter 139, Sampling and Testing (Title 25, Rules and Regulations, part I, Department of Environmental Resources, Subpart C, Protection of Natural Resources, Article III, Air Resources). January 8, 1960.

(2) DeWees, W.D. and K.C. Steinsberger. 1989. "Method Development and Evaluation of Draft Protocol for Measurement of Condensable Particulate Emissions." Draft Report. November 17, 1989.

(3) DeWees, W.D., K.C. Steinsberger, G.M. Plummer, L.T. Lay, G.D. McAlister, and R.T. Shigehara. 1989. "Laboratory and Field Evaluation of EPA Method 5 Impinger Catch for Measuring Condensable Matter from Stationary Sources." Paper presented at the 1989 EPA/AWMA International Symposium on Measurement of Toxic and Related Air Pollutants. Raleigh, North Carolina. May 1–5, 1989.

(4) Electric Power Research Institute (EPRI). 2008. "Laboratory Comparison of Methods to Sample and Analyze Condensable PM." EPRI Agreement EP–P24373/C11811 Condensable Particulate Methods: EPRI Collaboration with EPA, October 2008.

(5) Nothstein, Greg. Masters Thesis. University of Washington. Department of Environmental Health. Seattle, Washington.

(6) Richards, J., T. Holder, and D. Goshaw. 2005. "Optimized Method 202 Sampling Train to Minimize the Biases Associated with Method 202 Measurement of Condensable PM Emissions." Paper presented at Air & Waste Management Association Hazardous Waste Combustion Specialty Conference. St. Louis, Missouri. November 2–3, 2005.

(7) Texas Air Control Board, Laboratory Division. 1976. "Determination of Particulate in Stack Gases Containing Sulfuric Acid and/or Sulfur Dioxide." Laboratory Methods for Determination of Air Pollutants. Modified December 3, 1976.

(8) Puget Sound Air Pollution Control Agency, Engineering Division. 1983. "Particulate Source Test Procedures Adopted by Puget Sound Air Pollution Control Agency Board of Directors." Seattle, Washington. August 11, 1983.

(9) U.S. Environmental Protection Agency, Federal Reference Methods 1 through 5 and Method 17, 40 CFR 60, appendix A–1 through A–3 and A–6.

(10) U.S. Environmental Protection Agency. 2008. "Evaluation and Improvement of Condensable PM Measurement," EPA Contract No. EP–D–07–097, Work Assignment 2–03, October 2008.

(11) U.S. Environmental Protection Agency. 2005. "Laboratory Evaluation of Method 202 to Determine Fate of SO_2 in Impinger Water," EPA Contract No. 68–D–02–061, Work Assignment 3–14, September 30, 2005.

(12) U.S. Environmental Protection Agency. 2010. Field valuation of an Improved Method for Sampling and Analysis of Filterable and Condensable Particulate Matter. Office of Air Quality Planning and Standards, Sector Policy and Program Division Monitoring Policy Group. Research Triangle Park, NC 27711.

(13) Wisconsin Department of Natural Resources. 1988. Air Management Operations Handbook, Revision 3. January 11, 1988.

18.0 Tables, Diagrams, Flowcharts, and Validation Data

BILLING CODE 6560–50–P

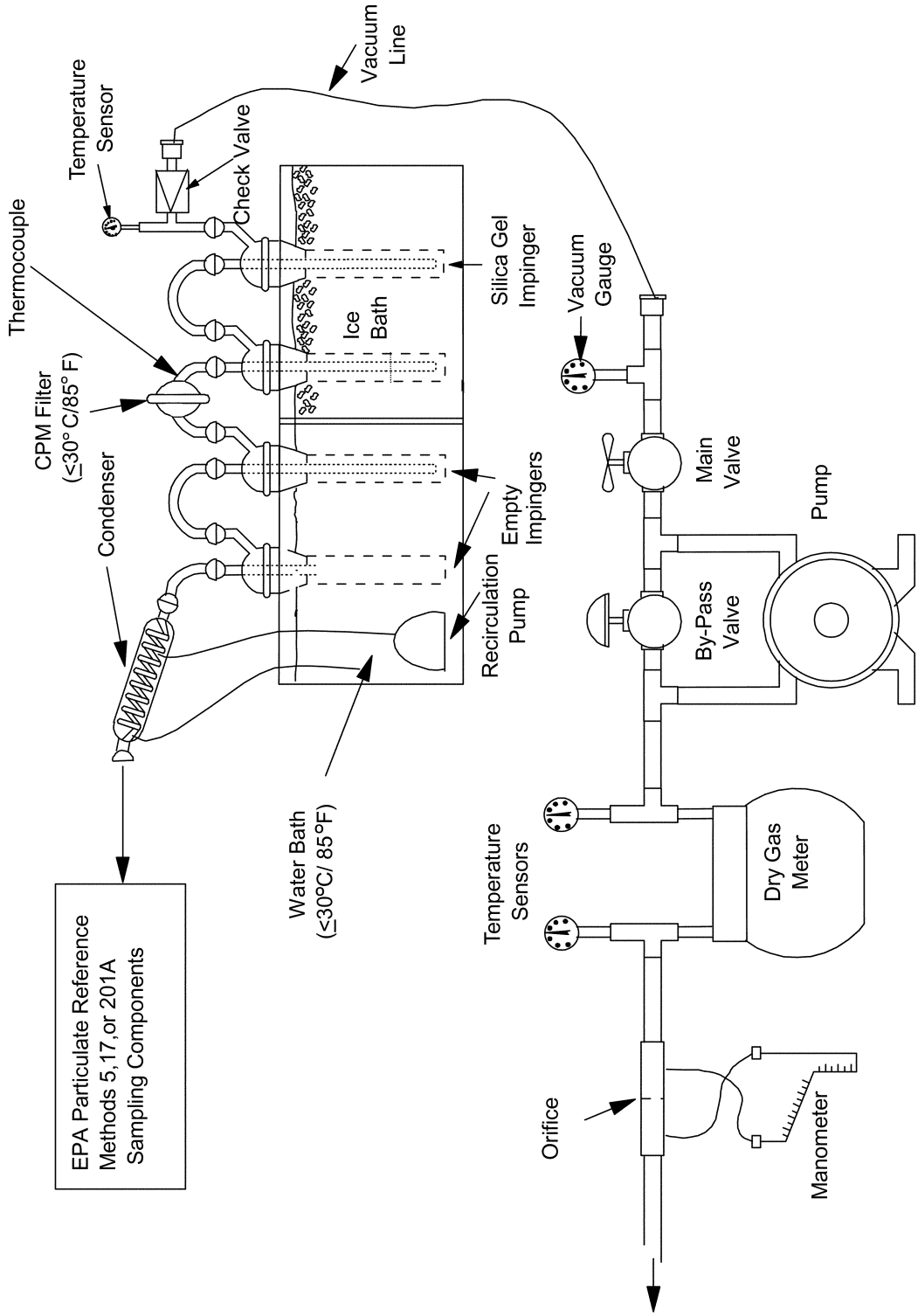

Figure 1. Schematic of Condensable Particulate Sampling Train

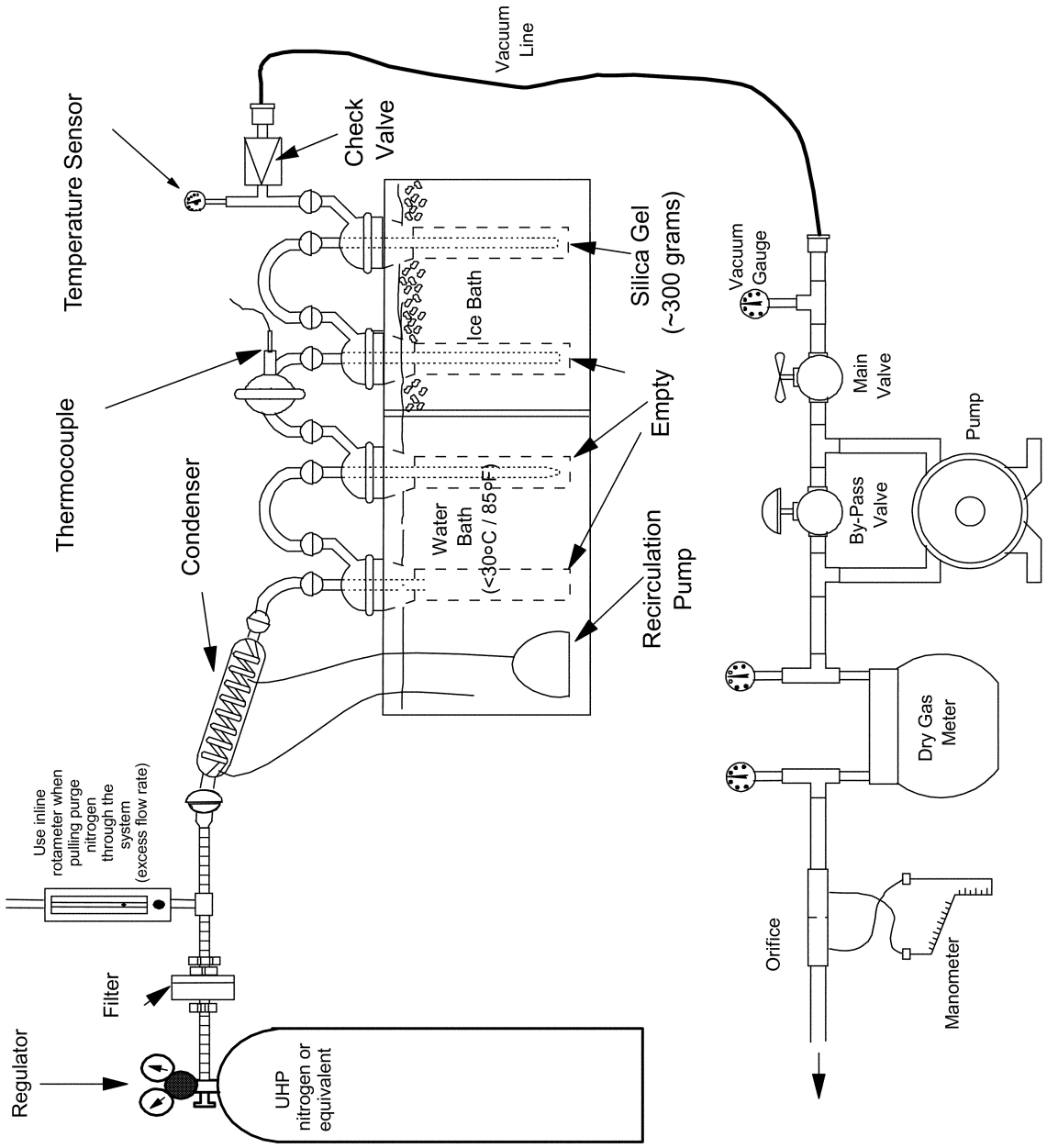

Figure 2. Nitrogen Purge Train Configuration (Vacuum Purge)

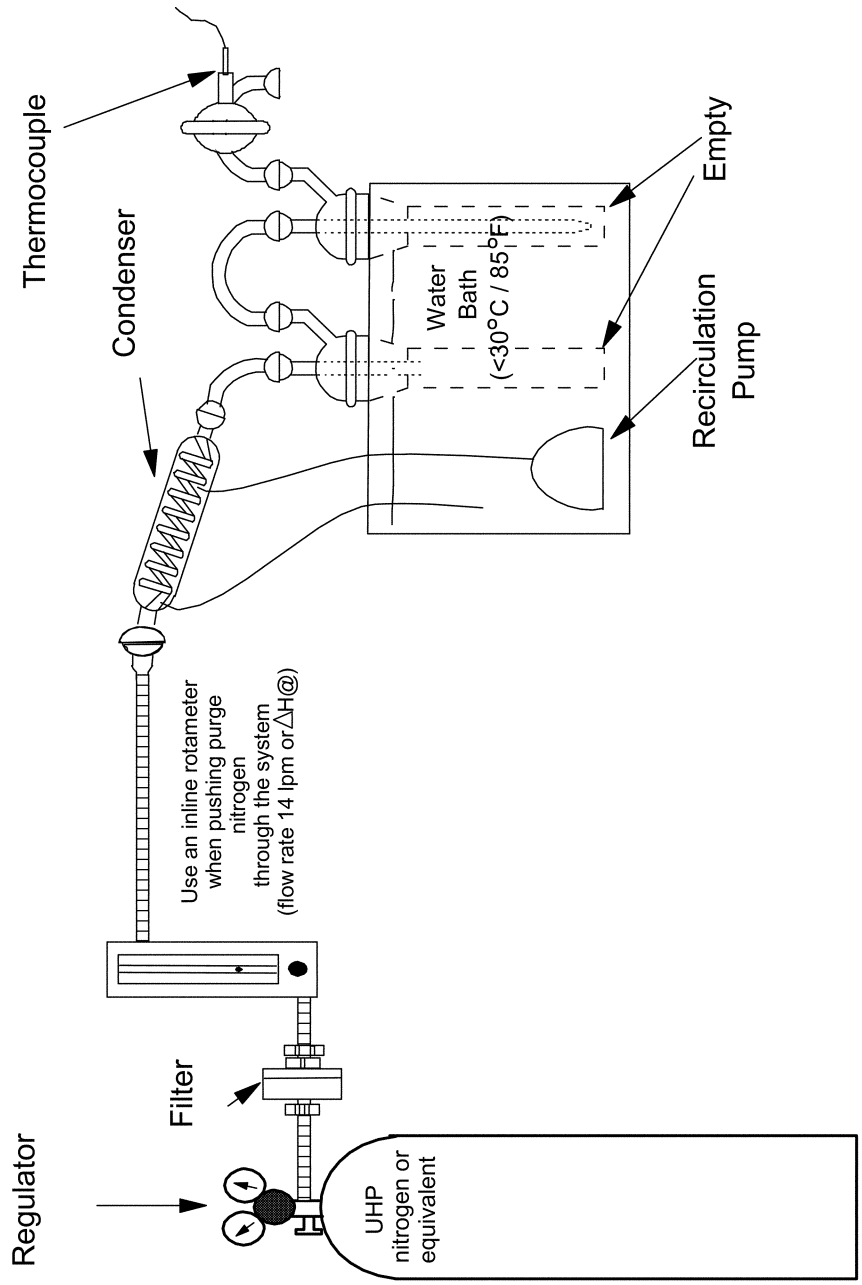

Figure 3. Nitrogen Purge Train Configuration (Pressure Purge)

BILLING CODE 6560–50–C

FIGURE 4—FIELD TRAIN RECOVERY BLANK CONDENSABLE PARTICULATE CALCULATIONS

Field Train Recovery Blank Condensable Particulate Calculations	
Plant	

FIGURE 4—FIELD TRAIN RECOVERY BLANK CONDENSABLE PARTICULATE CALCULATIONS—Continued

Date	
Blank No.	
CPM Filter No.	

FIGURE 4—FIELD TRAIN RECOVERY BLANK CONDENSABLE PARTICULATE CALCULATIONS—Continued

Water volume added to purge train (V_p)	ml
Field Reagent Blank Mass[a]	
Water (Section 11.2.7)	mg
Acetone (Section 11.2.6)	mg
Hexane (Section 11.2.8)	mg
Field Train Recovery Blank Mass	
Mass of Organic CPM (m_{ob}) (Section 11.2.3).	mg
Mass of Inorganic CPM (m_{ib}) (Equation 3).	mg

FIGURE 4—FIELD TRAIN RECOVERY BLANK CONDENSABLE PARTICULATE CALCULATIONS—Continued

Mass of the Field Train Recovery Blank (not to exceed 2.0 mg) (Equation 2).	mg

[a] Field reagent blanks are optional and intended to provide the testing contractor with information they can use to implement corrective actions, if necessary, to reduce the residual mass contribution from reagents used in the field. Field reagent blanks are not used to correct the CPM measurement results.

FIGURE 5—OTHER FIELD TRAIN SAMPLE CONDENSABLE PARTICULATE DATA

Other Field Train Sample Condensable Particulate Data	
Plant	
Date	
Run No.	

FIGURE 5—OTHER FIELD TRAIN SAMPLE CONDENSABLE PARTICULATE DATA—Continued

CPM Filter No.	
Water volume added to purge train (max 50 ml) (V_p).	ml
Date	
Run No.	
CPM Filter No.	
Water volume added to purge train (max 50 ml) (V_p).	ml
Date	
Run No.	
CPM Filter No.	
Water volume added to purge train (max 50 ml) (V_p).	ml

FIGURE 6—CPM WORK TABLE

Calculations for Recovery of Condensable PM (CPM)

Plant

Date

Run No.

Sample Preparation—CPM Containers No. 1 and 2 (Section 11.1):

Was significant volume of water lost during transport? Yes or No .....

If Yes, measure the volume received .....
Estimate the volume lost during transport ..... ml

Plant

Date

Run No.

Was significant volume of organic rinse lost during transport? Yes or No .....

If Yes, measure the volume received .....
Estimate the volume lost during transport. ..... ml

For Titration:
Normality of NH_4OH (N) (Section 10.2) ..... N
Volume of titrant (V_t) (Section 11.2.2.2) ..... ml
Mass of NH_4 added (m_c) (Equation 1) ..... mg

For CPM Blank Weights:
Inorganic Field Train Recovery Blank Mass(m_{ib}) (Section 9.9) ..... mg
Organic Field Train Recovery Blank Mass (m_{ob}) (Section 9.9) ..... mg
Mass of Field Train Recovery Blank (M_{fb}) (max. 2 mg) (Equation 2) ..... mg

For CPM Train Weights:
Mass of Organic CPM (m_o) (Section 11.2.3) ..... mg
Mass of Inorganic CPM (m_i) (Equation 3) ..... mg
Total CPM Mass (m_{cpm}) (Equation 4) ..... mg

BILLING CODE 6560–50–P

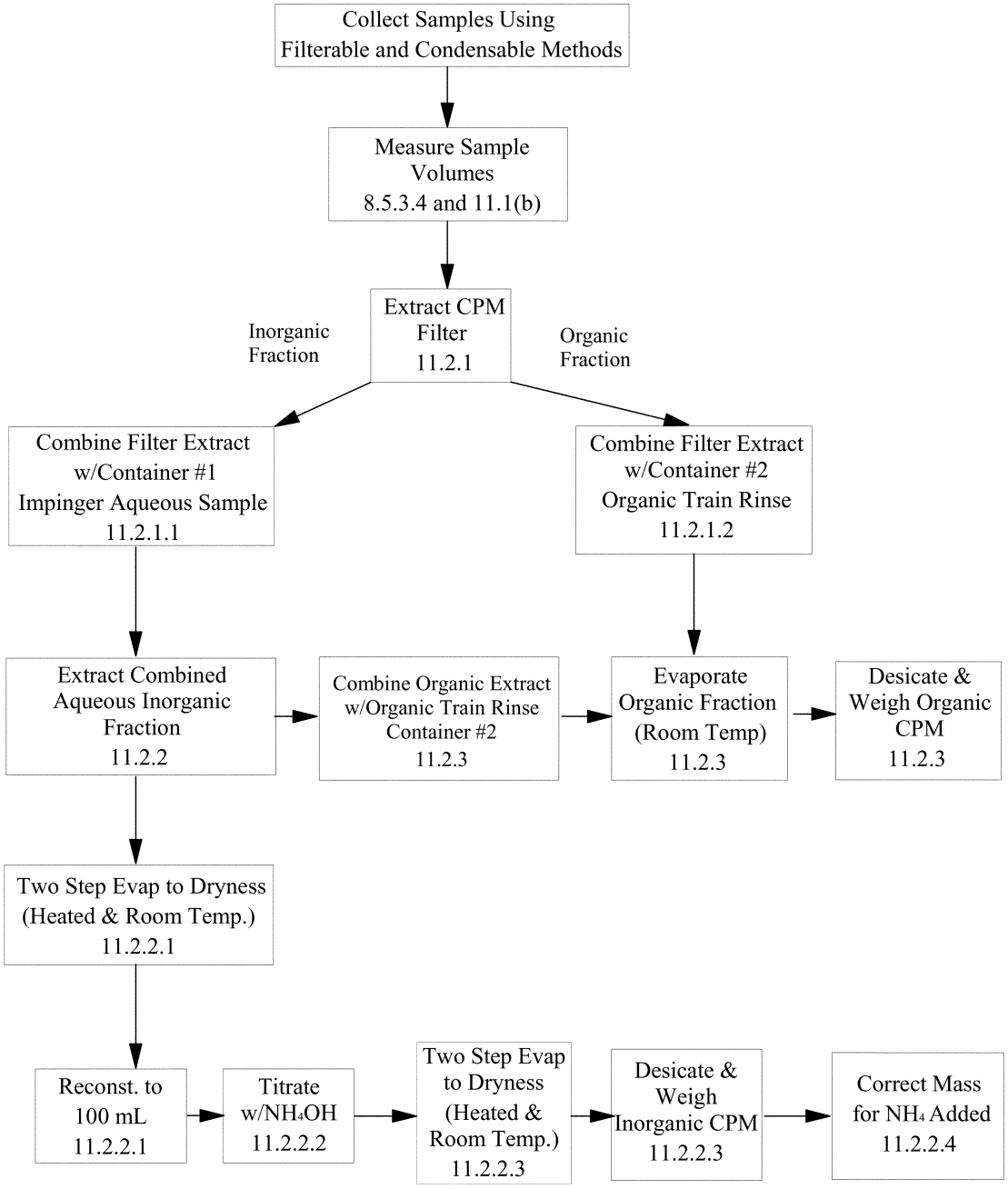

Figure 7. CPM Sample Processing Flow Chart

[FR Doc. 2010–30847 Filed 12–20–10; 8:45 am]
BILLING CODE 6560–50–C